A Guide To

Japanese Papermaking

Making Japanese Paper in the Western World

Donald Farnsworth

3rd Edition

A Guide To

Japanese Papermaking

Making Japanese Paper in the Western World

Donald Farnsworth

3rd edition

ISBN: 978-0-9799164-8-9

Published by Magnolia Editions, Inc.

MAGNOLIA EDITIONS
2527 Magnolia St, Oakland CA 94607
www.magnoliapaper.com

ACKNOWLEDGMENTS

Japanese text by Kunisaki Jihei and woodcut illustrations by Seichuan Tōkei are reproduced from a 1925 edition of *Kamisuki chōhōki (A Handy Guide to Papermaking)*, first published in 1798.

Charles E. Hamilton's translations are reproduced from the 1948 English language edition of *A Handy Guide to Papermaking* published by the Book Arts Club, University of California, Berkeley. With the 1948 edition now out of print and increasingly difficult to find, I hope to honor Mr. Hamilton's efforts by bringing his thoughtful and savvy translations to a broader audience. His translations appear italicized and circumscribed in the following text.

I would like to acknowledge Mr. Fujimori-san of Awagami Paper and his employees, Mr. Yoshida-san and his employees, for furthering my understanding of Japanese papermaking. Thanks also to my editor Nick Stone and to the staff at Magnolia Editions: Era Farnsworth, Tallulah Terryll, and Nicholas Price, and interns David Wild, Sam Pelts, and Arlene Suda.

Table of Contents

Author's Preface
(from *A Handy Guide to Papermaking*, 1798)

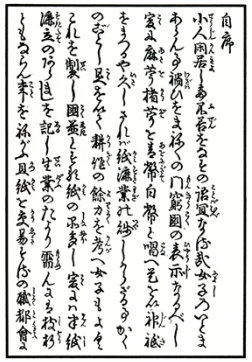

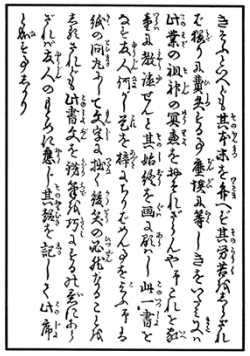

How true is the saying that an ordinary person living at his ease can be up to no good! A woman with leisure is without doubt the source of all evil and indication of a degenerate country. Now hemp and paper mulberry are called nigite and shira-nigite, and have long been used in worshiping the gods. The business of papermaking, therefore, is no ignoble calling. Many are the kinds of paper made to the profit of the nation by women with a thought to time not spent in the fields. Here I shall relate in outline the making of hanshi, in the hope that my book may serve as a guide to the earning of a livelihood. The paper trade, moreover, is an occupation earnestly pursued in the cities, yet little is understood of its particulars. Must it not be because they are unaware of its hardships that people have so little regard for heedless expenditure of paper and little fear for the patron god of this vocation? Thinking to teach it to my household, I made this book, illustrating the whole in pictures. A certain friend urged me to print it. Being a mere paper dealer, untutored in letters, I realize it cannot fail to provoke smiles. Still, a graceful style being not my object, I have deferred to the wishes of my friend, and with this acknowledgment conclude my preface.

流し漉き – *Nagashizuki*: Japanese papermaking method

流れる (*nagareru*)
to be washed or carried away

漉く (*suku*)
to make something (i.e. paper) from wet, pulpy material by spreading it thin and letting it dry

溜め漉き – *Tamezuki*: Western papermaking method

溜め (*tame*)
cesspool; sink; manure sink (stagnant)

漉く (*suku*)
to make something (i.e. paper) from wet, pulpy material by spreading it thin and letting it dry

What's in a name? *Tamezuki, the Japanese word for Western style sheet formation, describes a one dip process with a few shakes forward, back and side to side – rather still and "stagnant," especially when compared to the movements of Japanese sheet formation (see p. 55).*

Introduction

Traditional Japanese handmade paper, called *washi* in Japan, (*wa* meaning 'Japanese' and *shi* meaning 'paper') has often been mislabeled in the West as "rice paper." Today most artisans are aware that washi is not made from rice, but from the inner bark bast fibers of kōzo *(Broussonetia papyrifera* or paper mulberry), mitsumata, and gampi. From these three plants the Japanese make a wide variety of papers. The stronger and more prevalent of the papers in this repertoire are made from kōzo. Kōzo papers are used in book binding, clothing, and the arts. Mitsumata is used for decorated papers, dipped designs, water-drop paper and Japanese currency. Gampi, the rarest and most difficult to cultivate, is used for making lens tissue, mending tissues, and specialty papers that resist insect attack. All three fibers are prepared in the same way, with slight processing variations determined by the desired qualities of the final paper.

According to the *Nihon Shoki* ("chronicles of Japan," written in 720), the Korean Buddhist priest Doncho first introduced the Chinese methods of making ink and paper to Japan in the year 610. For many years, papermaking techniques were carefully guarded trade secrets. The woodcuts presented here first appeared in *Kamisuki Chōhōki* (*A Handy Guide to Printmaking)* by paper merchant Kunisaki Jihei, an 18th-century manual instructing farmers on the fabrication of a low-cost, common paper. By this time, such papermaking methods were no longer secret and Sekishu washi, named for the western Shimane prefecture area (present-day Iwami) where the paper was first produced, was well known beyond the region.

The demand for Japanese handmade paper eventually created a countrywide industry which grew from a seasonal activity to a thriving, year-round business. In 1901 there were 68,562 washi papermaking households in Japan. With the onset of the Industrial Revolution's automated paper mills, the relative hard labor associated with hand papermaking has meant that younger generations have elected not to continue in the family tradition and the number of papermakers has steadily declined since the turn of the century. In 1941 the number of papermaking households had dropped to 13,577. By 1979, that number had dwindled to only 679.

Japanese governmental agencies have attempted to stem the decline of washi production by designating various papers as *Important Intangible Cultural Properties* or local washi industries as *Traditional Handicraft Industries* and certain individual papermakers as *Living National Treasures*. Despite these efforts, the population of washi-producing artisans continues to decline.

When making paper in the Japanese method called Nagashizuki (流し漉き), there is a distinctive rhythm and symphony of sounds emanating from the motion of forming and couching Japanese paper. The method has been handed down, refined and perfected over the centuries. Each dip contains dancing Hiroshige-like waves punctuated with a tilt and gentle flick that washes unwanted knots overboard. The couching motions and sweet tones are similar to a ballet, with each movement choreographed for the conservation of energy and the preservation of the body. Although papermaking is hard work, all of the papermaker's effort, patience, and practice is rewarded in the instant the smooth, flat, beautiful paper is peeled away from the drying board.

The thousand-year-old Japanese tradition of washi offers timely lessons in conservation, recycling, and waste management. Unlike recent papermaking practices in the West where deforestation for the sake of supplying pulp mills has often been the norm, Japanese papermakers harvest paper mulberry yearly. The plants send out new

shoots and the fibers are replenished in subsequent growing cycles. The raw material, fuel, and chemicals necessary to make paper are all found in a single plant: paper mulberry. The inner bark supplies the fiber; the stripped heartwood from the stalks is used for fuel to cook the fiber; and the leftover ashes produce the caustic solution used in the cooking and separating of the fibers. This caustic or alkali material is the essential ingredient in the cooking solution. In order to make paper from the cellulose found in the raw plant fibers, the non-fibrous lignin in the bark must first be removed. Lignin dissolves in an alkali "cook" at high temperatures. Using steam and mild soda ash allows the lignin to be gently coaxed out while preserving the cellulose.

Harvested kōzo stalks are first softened with steam. The ends of the softened stalks are frayed with a mallet, enabling the bark to be stripped by hand from the heartwood. Next, after a thorough soaking, the outer bark is scraped away from the inner bark. Finally, the cleaned inner bark strips are rinsed and hung to dry. Bark processed to this point is traded throughout Asia and available from handmade paper suppliers in North America.

The cleaned inner bark requires further processing before it can be made into paper. Still in long strips, the bark must be cooked in a caustic solution, rinsed, beaten, and stirred into a vat of water before sheets can be formed.

At the sheet-forming stage, Japanese papermakers add one other key ingredient to the papermaking process: a viscous solution they call *neri*. Neri (referred to as "formation aid" in the West) is most often derived from *tororo-aoi* (of the *hollyhock family and related to hibiscus manihot*), a starch found in the root or pod of the hibiscus. In the vat, this slippery hibiscus starch thickens the water, causing the long paper fibers to move in slow motion and keeping them in suspension, thereby preventing entanglement and retarding drainage. It is these distinctive characteristics that enable the Japanese papermaker to produce thin, well-formed sheets.to settle during the swift motion of sheet formation.

True Paper Mulberry

Traditional Japanese paper is waterleaf (unsized); the formation aid neri does not act as an adhesive in bonding fibers together as other starches might. After pressing and evaporation, this starch is barely detectable, as there are relatively few solids in the compound. Formation aid does not itself bond the fibers together; nevertheless, by enabling the papermaker to craft a well-formed sheet, neri remains very much indirectly responsible for increasing the bonding between the fibers, and is thus responsible for creating a stronger sheet.

Equipment (18th century)

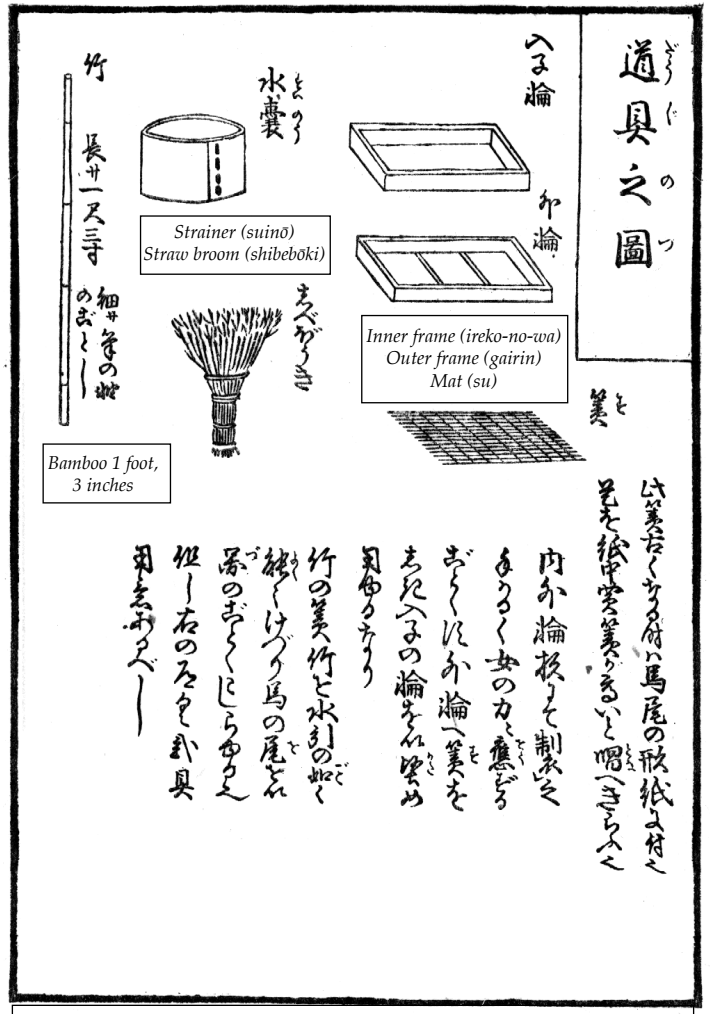

When the mat has got old, the outline of the horsehair lacing will show in the paper, in speaking of which paper dealers say scornfully that the mat is "high."

The inner and outer frames are made of cryptomeria, light so that they may be handled by women. The mat is spread over the outer frame and pressed firmly into place with the inner frame.

The bamboo mat, made of finely cut strips of bamboo, like mizuhiki, is laced together with horsehair, as shown. Careful attention, however, must be paid to the two articles above.

Equipment (contemporary)

Japanese paper can be made today using a variety of moulds and methods as described in this handy guide. The choice of materials and methods can be personal, economic and/or scale dependent. Illustrated below are a variety of equipment and tool suggestions.

Additionally, you will need the following raw materials: fibers (kōzo bark, abaca, etc.), soda ash, formation aid and the optional choices of dye, pigment, bleach, (chlorine or hydrogen peroxide) – not to mention a good supply of fresh water and a place to spill it.

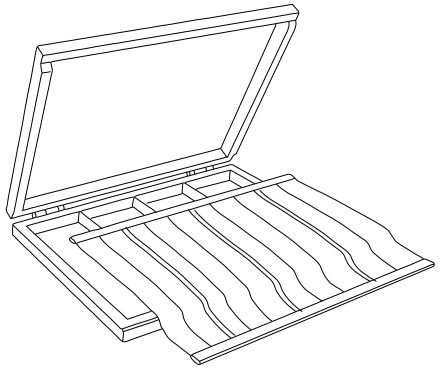

Japanese style mould (su and keta)

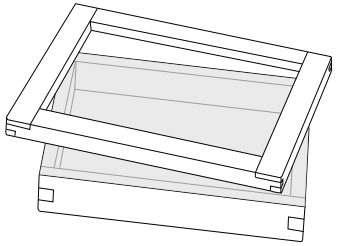

Student mould

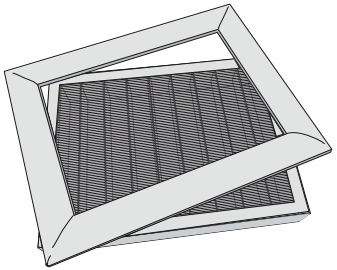

Western style ribbed mould

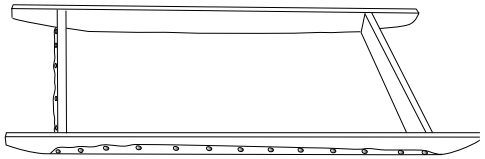

Nepalese or silk screen style mould

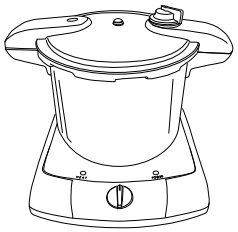

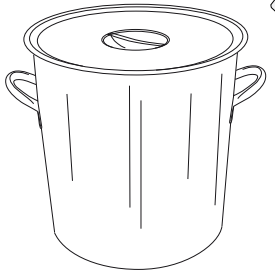

Hot plate and stainless steel cooking vessels
(Outdoor propane burner – see p. 22)

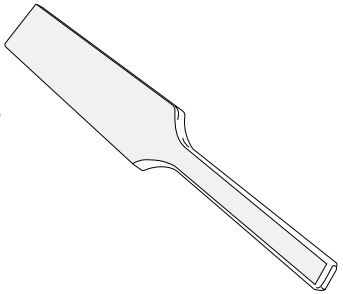

Beating mallet

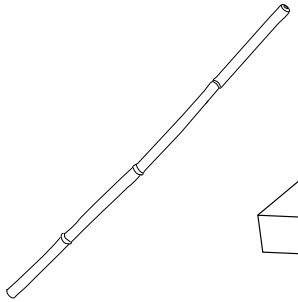

Bamboo stirring stick
(Vat stirring comb & sugeta suspension system – see p. 48)

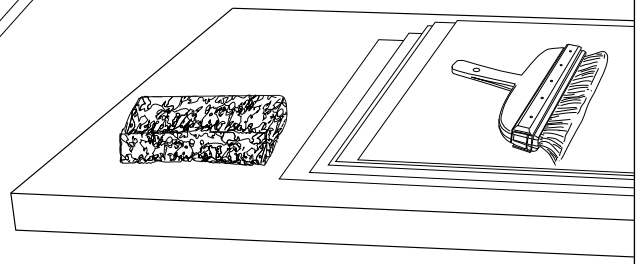

Drying board, sponge, hake or wall paper brush, interfacing

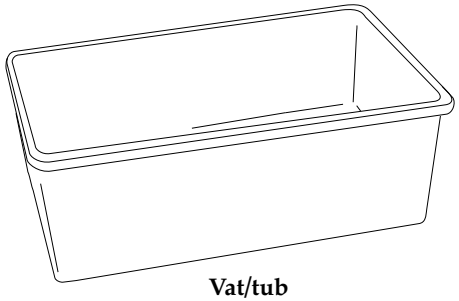

Vat/tub
(Contemporary Japanese vat – see p. 48)

Bucket(s), ladle, paint strainer bag

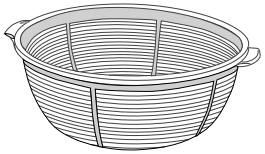

plastic sieve

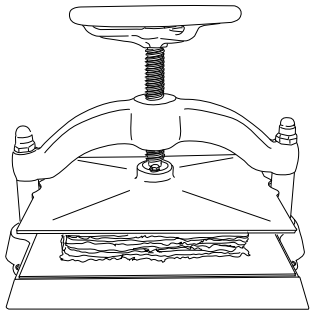

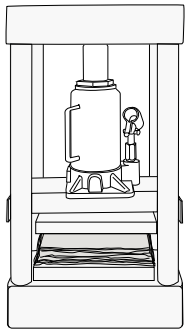

Hydraulic or book press
(Lever and bucket press – see p. 79)

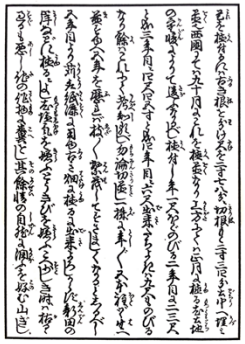

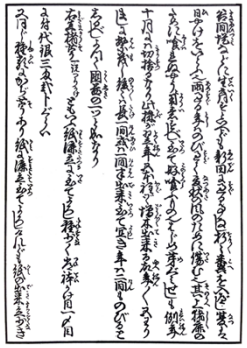

In planting the trees, old roots are divided and cut in lengths of about 3 ¼ inches; the cuttings are then buried in the earth 2 ¾ inches or so deep. In the Western Provinces, trees are planted in the ninth or tenth month, while around Kyoto they are planted in the first month, but the season will vary according to the climate of the locality. The year of planting, they will grow to about 1 foot in height, the second year to 2 or 3 feet, the third year to 4 feet and 5 or 6 inches, and the fourth year will reach 6 feet, while the taller ones may grow as high as 9 feet, and proportionately thereafter. Of course, every year each stump will put forth about five more branches, and so, when five years have passed, the growth will have become dense and quite imposing. From the fifth year onward, the trees are cut for use in papermaking. They do not thrive when planted in old fields; it is better to plant them on the ridges of newly reclaimed fields and such spots. They dislike salt and dislike maize. Given too little fertilizer, they die, and too much is equally bad. They like to be enriched naturally by the extra strength of fertilizer put on other crops. Although they grow on the slopes of mountains, in valleys, on embankments and such, nothing excels a newly reclaimed rice field, which should be fertilized from time to time. They do not like the sun in summer; in years of heavy rain they grow too fast. They are injured, too, by the summer and autumn winds. Care must be taken, moreover, to see that they are not eaten by wild hogs and deer, which are exceedingly fond of them. First, green shoots appear, but in the tenth month of each year are pruned. These stumps, the following year, will each bring forth about five branches of new wood, and so each year become half again as dense; in time, they will reach a height of 6 or 9 feet, and in a very good year, one finds, will grow as high as 12 feet, becoming truly a profit to the nation.

The above-described paper mulberry (kōzo) is also called makoso (or tsurikake) and is very fine for papermaking. Its seeds are few, selling ordinarily at about 3 momme, 2 bu per kan.

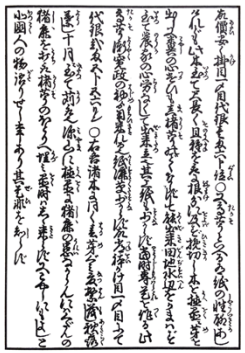

There is another variety of the same family called kajiso. Though excellent for papermaking, little can be made therefrom, and so the price is low, being about momme, 6 bu per kan. Still another variety is called takaso. While of slightly poorer quality for paper, this tree grows very high, and the roots need not be divided for propagation; cuttings can be made instead. Slips produce shoots when planted and grow well without the care for manuring required by makoso; the trees thrive equally well on cultivated land or near water, without the farmer's solicitude. In addition, it produces a great quantity of paper, and is the tree most cultivated nowadays. Takaso has come into use gradually since the beginning of Kansei (A.D. 1789). Since the papermaking parts are plentiful, 1 kan sells for but 2 momme, 5 bu, 5 or 6 rin. All the trees described above, like other trees, send forth shoots in spring, grow thick in summer, drop their leaves in fall, and are cut during the tenth month. In order to protect them from the ravages of deer and wild hogs when planting in the mountains, one of these animals should be killed and buried around the mulberry, after which they will no longer come. Some in the Northern Provinces have said that this also makes good fertilizer, but whether it be true or not we cannot say.

Alternate Fibers: Following the instructions in this manual, paper can be made from most fibrous plant material. Stronger or weaker "cooks" may be called for depending on the quality of fiber selected. The exciting fact that every plant makes a paper with differing characteristics endows papermakers with opportunities for limitless combinations of fibers, cooking times, gentle bleaching techniques, pigment combinations, dyes and combinations of fibers and additives.

continued on page 19

Cutting Paper Mulberry in Winter

The trees are cut during the tenth month. Sometimes a stand of trees may be sold uncut, on sight. The branches are cut evenly in the middle.

"If anyone wants me, say I'm cutting in that field yonder. Cinch them up tight, there!"

Steaming Paper Mulberry

Farmers without kettles gather together for steaming. Rental on a kettle consists in the wood left after the bark is peeled off. Since this must be used for firewood, they also peel off the bark. The branches are cut into lengths of about 2½ to 3 feet and steamed. After a time, one will notice the bark begin to peel at the cut ends of the branches, showing that it is ready. On a winter night five or six kettlefuls may be steamed. A kettle measuring 2 feet, 7 or 8 inches will do. The hoops are of straw. The root end of the branches should be placed at the bottom of the kettle.

"Steam some mochi for me to eat instead of steaming kōzo!"

Peeling The Bark

The bark is taken in the hand and peeled off, as shown. The core is of no use except as firewood.

"Shall I help peel, too?"
"Look, child! If you are going to peel, hold it the way I do, or you'll make stringy peelings as they do in East Iwami!"

Drying Paper Mulberry Bark

As soon as it is peeled, the bark is dried. Bunches as large as a woman can grasp in either hand will dry within two or three days, and, with a wind, may dry in a single day.

The bunches are opened for better drying and afterward retied into bundles of 5 kan each.

"These are nice and dry. I'll undo the knots to dry them where they're tied."

Soaking The Bark

Now when the paper is ready to be made, the bark is put to soak in water from morning until evening (or if one begins in the evening, until morning), and when brought back the thin bark is stripped off. The soaking is done as illustrated. A space is cleared at the center of the pole for convenience in carrying it back on the shoulder. The bark may be soaked a day and a night.

"Oh, how my back aches!"

Shaving Off the Thin Bark

The black portion of the bark is stripped off and thrown aside. As the picture shows, it is pressed down with a kitchen knife, which is drawn forward, removing all the black bark. It is used in making a coarse paper, and is called "waste bark." After being thoroughly washed in a stream, it is placed in a pot and boiled. Then it is allowed to rot; after this it is beaten well, mixed with tororo, and molded into paper. In years when paper mulberry is scarce, the wood of the common mulberry (kuwa) is used, just like paper mulberry. Leaves of the tree may also be included. The bark lies flat from having been soaked in water; straw horseshoes serve as blocks. The coarse paper made solely from "waste bark" is called shoso-zuki and is of stout quality.

Removing Astringency

On the market "waste bark" is also called "tree bark." Ten kan sell for about 12 momme, though the price may be higher or lower. On occasion, too much may be molded, and is then shipped for sale to Iwakuni in Bosh and to Ogata and Otake in Geish.

When the waste bark has been shaved off, 5 kan of the true fiber is made into paper, which requires three days, or, with skill, two days. The charge for molding this quantity is 86 momme. The 5 kan of bark is taken to a stream and thoroughly washed, then washed again in a joined or a woven-rush bucket, weighted down with rocks to press out all the water. Next it is boiled in the pot shown on the following page. The shaven fiber, called sosori, must be washed until no longer sticky.

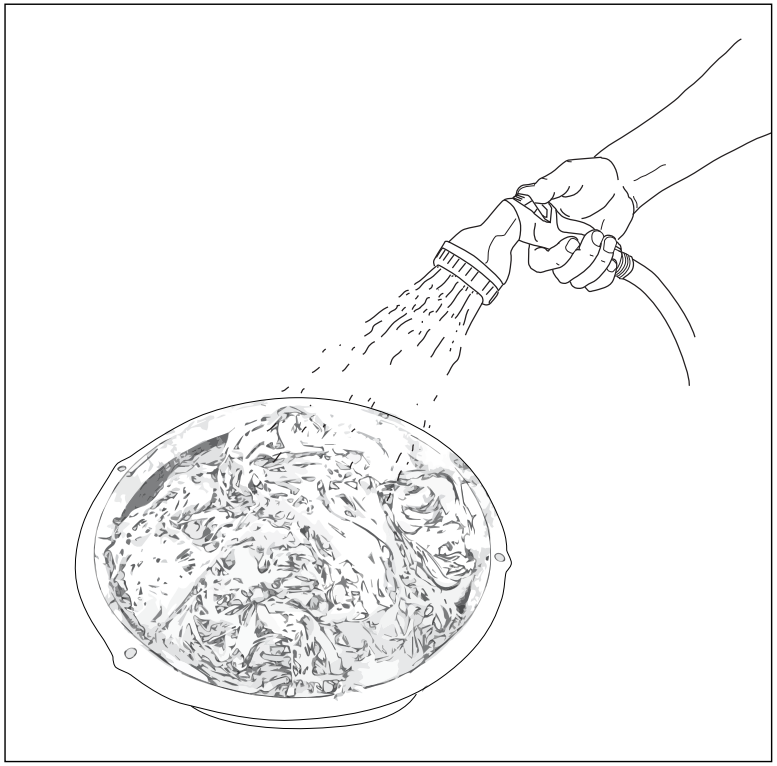

Rinsing alkali from cooked kōzo bark

Although the following pages outline the steps required for Japanese style papermaking using kōzo, you can substitute gampi, mitsumata bark or any number of fibrous plant materials and still achieve a wide variety of beautiful papers. Already-processed fibers like abaca can also be used, but need not be re-cooked; simply soak the sheets in water overnight and begin with the chapter on beating.

Plant fibers are comprised largely of cellulose (polysaccharide consisting of chains of glucose monomers) and lignin (a natural polymer that lends rigidity to the plant's cell walls). The presence of lignin in processed fibers will yield a sheet that is not archival. We will remove lignin in the next step by cooking kōzo in a mild alkali.

Cooking the Mulberry Fiber:

This product is placed in a boiler, and two sticks, fashioned so (see cut), are fixed inside, in such a way that they are held upright by the fiber. Over them is put more fiber, just as in cooking soba and udon, and the whole is boiled. Lye, got from burned buckwheat chaff, is also boiled with the stock. As it boils, the two sticks are stirred round and round as though one were washing yams. The sticks are then removed; the hot liquid bubbling up from the holes will show that it is boiling well. In any case, great care must be taken that it does not cook unevenly.

Though boiling should take place naturally, sometimes it will not. In this case, the addition of about 1 ½ quarts of rohai will cause it immediately to boil. Lacking rohai, lime will do as well. The addition of ashes gives the molded paper a reddish hue. The following note may be unnecessary, but it is offered as a matter of information: when at the start the wood is to be steamed, and later when it is to be boiled, as just described, it sometimes will not steam or boil whatever is done. Mystification over what could prevent boiling has led to the popular belief that it is bewitched by the "dog god." This being a matter with which the people in these papermaking provinces are well acquainted, they repeat a prayer, without fuss, to drive it away. The "dog god" is a strange being, for it possesses not only boiling water, but also sometimes the foot bellows of furnaces used in casting iron, on which occasion not a drop of molten metal will issue from the spout. These occurrences, although very mysterious, are recommended to the reader's attention.

Second Washing of the Fiber

The fiber is placed in a rush basket, immersed in a stream and thoroughly rinsed of lye and ashes; then it is drained well.

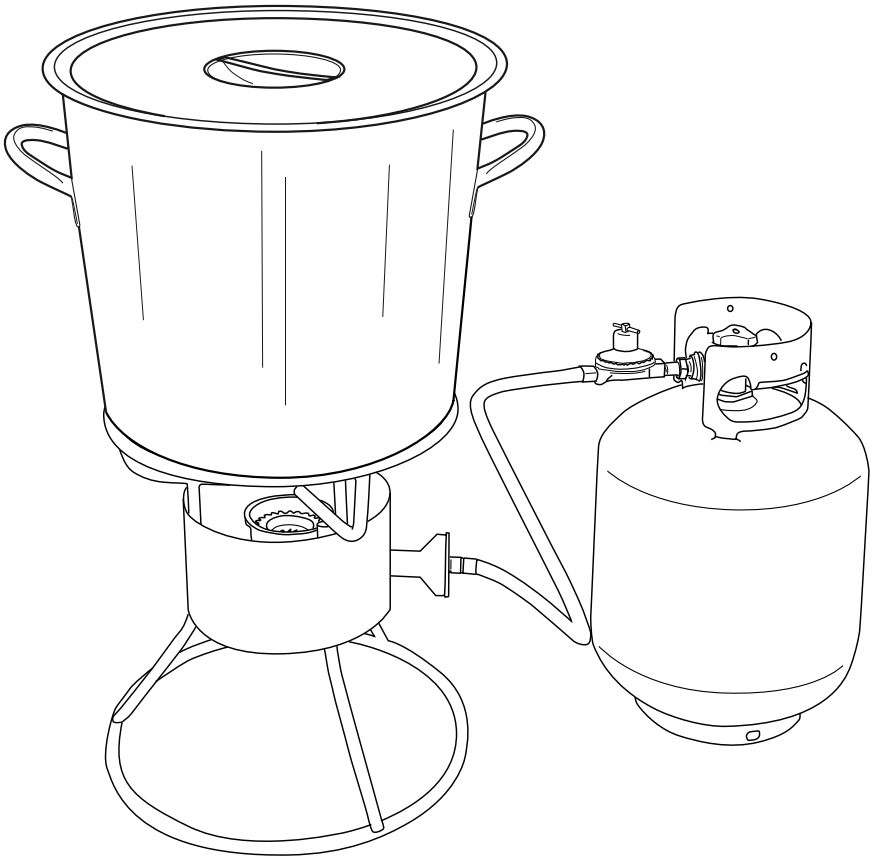

Outdoor propane burner with stainless steel pot

Cooking

Cooking and cleaning kōzo bark to a large extent determines what the finished paper's characteristics will be. Bark cooked with more or stronger chemicals for a longer period at higher temperatures will produce a softer paper. Bark processed with a minimum of chemicals for a shorter time will produce crisper and stronger paper. These processes call for the use of soda ash, a caustic substance which requires careful handling.

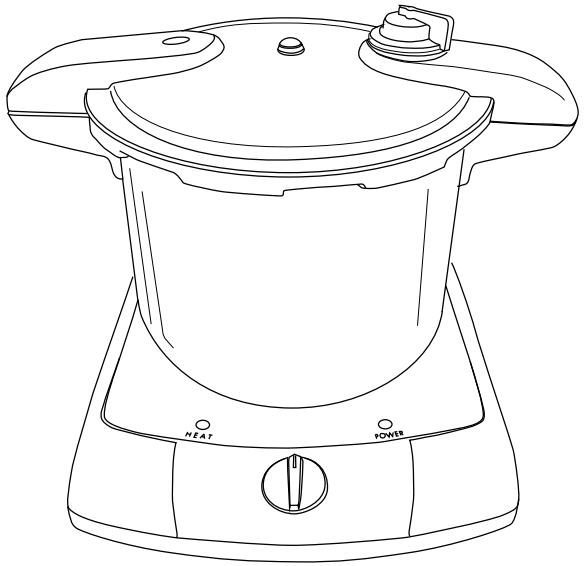

A stainless steel pressure cooker used for faster de-lignification

Safety: *Soda ash (sodium carbonate, Na^2CO^3) is alkali and should be handled with care. It is classified as a hazardous irritant in the case of skin or eye contact, ingestion, or inhalation and should always be added to water and not the reverse, as spattering can occur. It is also a good idea to wear rubber gloves, a vinyl or rubber apron, and safety glasses. Even in a diluted state, soda ash has a drying and cracking effect on the skin, so wear rubber gloves. Caustic soda (NaOH) is not recommended as it is dangerous to handle and very harsh on the fibers. Do not use aluminum pots when cooking with alkali chemicals like soda ash.*

Cooking - delignification

Kōzo, (mitsumata and gampi) requires soaking for a day or two and cooking for half a day in a mild alkali, soda ash, (sodium carbonate, Na2CO3, aka washing soda) to remove lignin. The cooked fiber must be rinsed prior to pounding (beating). In this papermaking paradigm, harsher alkali (i.e., caustic soda) and longer cook times produces softer paper while shorter, gentler cooking yields harder paper, as a longer cook and harsher alkali both diminish the fibers' natural binder, hemicellulose.

Procedure:

1. Soak kōzo bark overnight in fresh water to soften fibers, then drain.

2. Fill a stainless steel or enamel pot with water and bring to a boil. Never use an aluminum vessel as it will react with caustic solutions.

3. Slowly stir in approximately 4 to 8 ounces of soda ash per pound of dry bark.

4. Carefully add bark to the boiling water.

5. Bring mixture back to a boil and simmer immediately. Stir to rearrange the bark from time to time.

6. After two to three hours of cooking, test a length of bark to see if the fibers will separate. If by pulling on a short, narrow piece of bark (about 4" x ¼") it separates with a slight tug, the bark is done. If it takes a strong tug to separate, continue cooking and test every 15 minutes. The longer the cooking time and the easier the fibers pull apart, the softer the resulting paper.

7. Rinse cooked fibers by pouring them into a colander and flushing with water until the runoff is clear.

Removing Impurities – *Chiri* (optional)

The cooked and rinsed fibers prepared in the above manner will usually contain black specks of the outer bark called *chiri*. These impurities are generally considered undesirable in higher quality papers.

To remove the black outer bark specks, the strands of fibers must be sorted through by hand. This is a painstaking task (called *chiri-tori*) and is required only for aesthetic reasons. Bleaching also may be used to minimize outer bark specks.

Procedure:

1. Fill a small wash tub with water and stir in the cooked and rinsed kōzo.

2. With a chopstick in your left hand, lift out small quantities of fibers by dragging the chopstick through the water and fiber mixture, then lifting it out into a horizontal position.

3. Pick the black specks of bark off the chopstick and place the impurities in a pile. (This pile of dark fibers and outer bark can be made into black bark paper, *chirigami*, a common wrapping paper in Japan.)

4. Slide the picked-over fibers off the chopstick onto a waterproof surface, creating a pile of cleaned fiber.

5. Repeat the process until the vat is empty of fibers. In the end there should be two piles of fiber: one mostly black bark and darker fiber, and a larger pile of clean fiber.

Bleaching kōzo in the sun in a 3% hydrogen peroxide solution with a dash of soda ash

Bleaching

Paper fiber can be bleached to produce a whiter, brighter and cleaner looking sheet of paper. Chemical bleaching is most commonly done after the cooking and before the beating step. Ultraviolet (sunlight) bleaching is done throughout the papermaking process: the stripped bark gently bleaches as it rinses in a stream and hangs to dry, and when the finished paper is brushed onto a board and placed in the sun to dry. Sunlight can also be used in conjunction with chemical bleaches. The process of bleaching breaks down impurities, but does not necessarily stop there. The following is a list of some potential undesirable side effects of bleaching:

- Bleaching can cause the resulting paper to be softer. (Chemical bleaches break down hemicellulose, one of the components that make Japanese paper hard and crisp.)
- Residual chlorine bleach can discolor and shorten the life of the paper.
- Over-bleaching can cause the bleach to degrade the fibers, creating a weaker paper.
- Bleaching at the wrong pH can cause the paper to become darker, not lighter.

I. Sunlight Bleaching (ultraviolet light)

The mildest and simplest method for whitening cooked kōzo bark is to use the bleaching power of the sun (or a sun lamp).

Procedure:

1. After cooking and rinsing the fiber thoroughly, spread the fibers out in direct sunlight in a tray of water. (The Japanese traditionally place the bark in the sunny shallows of a running river.) A small quantity of hydrogen peroxide added to the tray of water and fiber will speed the bleaching power of the sun. Expect to see results after half a day of strong sunlight.

2. Change the water every few hours (less often if you are using hydrogen peroxid), rearranging the fibers to ensure all sides are exposed to sunlight.

3. Rinse thoroughly with fresh water.

4. It's best to use kōzo while it is still wet and not to allow the fibers to dry as re-cooking may become necessary.

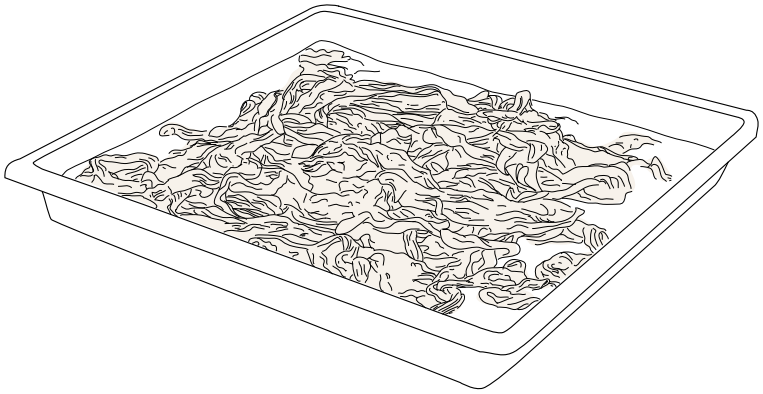

Bleaching kōzo in the sun in a 3% hydrogen peroxide solution with a dash of soda ash

II. Hydrogen Peroxide Bleaching

A second method for whitening may be achieved by using hydrogen peroxide. Hydrogen peroxide is available at the local druggist in a 3% solution. Concentrations of 30% can be obtained at chemical supply houses and must be diluted (ten parts water to one part hydrogen peroxide).

Safety: *Handle the higher concentrations (30%) with extreme care. Hydrogen peroxide at this concentration will cause severe burns on contact with eyes or skin. Read the warning on the label and take appropriate precautions. Full-cover safety glasses, rubber gloves and apron are strongly advised when handling the 30% concentration. In case of contact, immediately flush with water.*

Procedure:

1. After cooking and rinsing the fiber thoroughly, squeeze out the excess water and place in a bucket.

2. Prepare enough 3% solution of hydrogen peroxide to cover fiber. Adjust the pH to 9.0 by adding a dash of soda ash.

3. Check for proper pH using litmus paper. Stir the bark into the prepared solution.

4. When the desired shade of white is achieved (2 hours or so) rinse the fibers by placing them in a colander and flushing thoroughly with water.

5. Better and faster results are achieved by combining Hydrogen Peroxide bleaching with sunlight bleaching.

Note on pH Control: *Optimum hydrogen peroxide bleaching takes place in a solution with a pH of between 9.0 and 9.5. Below that, bleaching will be slow; above pH 10, browning will occur.*

III. Chlorine Bleaching

The third and least desirable method for whitening makes use of chlorine bleach. Paper made from fibers whitened with chlorine bleach often have residual chlorine in the finished sheet. This contaminant can accelerate the aging of the paper causing the paper to turn brown and brittle.

Safety: *Special care and rubber gloves are advised. Use in a well-ventilated area.*

Procedure:

1. After cooking and thorough rinsing, place the fibers in a five gallon bucket and cover with water.

2. Adjust the pH to 8 - 9.5 by adding a dash of soda ash. Check for proper pH with litmus paper.

3. Add approximately 1 cup of household bleach and stir. For smaller or larger batches, use the approximate ratio of 50 parts water to 1 part bleach. At the proper pH, bleaching should take place within one hour.

4. Rinse fibers by placing in a colander and flushing thoroughly with running water for 30 minutes.

5. To neutralize any remaining bleach, mix 1 cup of white vinegar with 5 gallons water and again rinse fiber with this dilute vinegar mixture.

6. Rinse thoroughly with fresh water for 15 to 30 minutes.

Beating

The cooked, rinsed and cleaned kōzo must next be beaten (*uchikata*) to further break down the bark. As this breakdown occurs, the fibers separate. This enables the fibers to disperse when stirred into water. Beating is a somewhat noisy process, so ear protection is a good idea. Additionally, a thick, firm beating surface helps minimize the din.

Procedure:

1. Select a quantity of pulp equal to that needed to make a loaf of bread. Squeeze out the excess water and place the pile on a sturdy and not-too-cherished surface.

2. Pound the pulp using a beating stick, wooden mallet or the like.

3. As each blow strikes the bark, notice how the impacted bark strands expand and flatten under the force. If this does not occur, the blows are not sufficiently forceful or the beating stick is not landing flat. If the cooked bark is too wet, the pulp will splatter right off the table.

4. After flattening the pile of pulp with consecutive blows, push pulp back together, rotate 90 degrees and continue beating. From time to time, invert the pile and fold in the ends.

5. Continue beating for 10 to 25 minutes.

The Beating Stick

Length: 3 feet. Square with rounded handle.

Beating the Fiber

The beating table is a plank 5 feet long, slightly more than 3 feet wide, 4 inches thick and is made of oak or cherry.

When paper is to be made the following day, the fiber is washed on the night before and beaten next morning. Breakfast may be put on and the fiber beaten while the rice is boiling. Tororo alone is added for beating, in winter papermaking; but in spring, papermaking nori is also sometimes added, otherwise it is difficult to mold. To hear this sound in the distance, from a lonely mountain hut, is very touching to the heart.

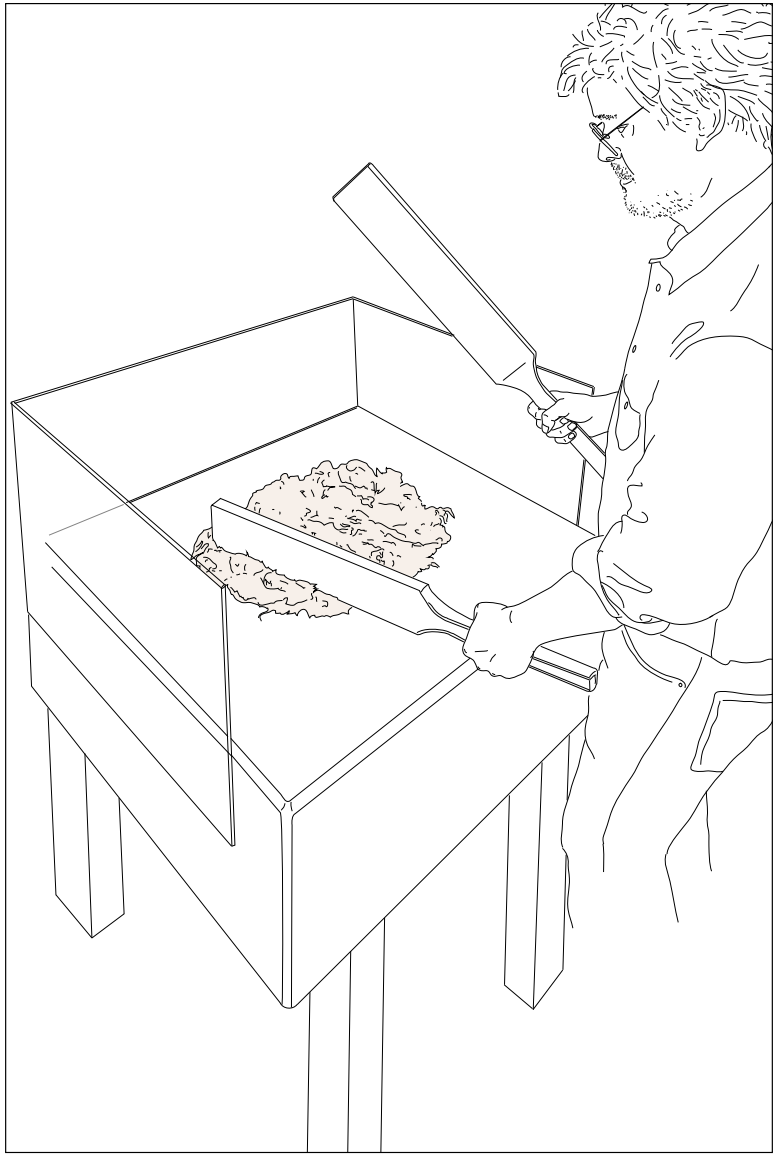

Beating kōzo on a solid butcher block table: flatten the pile of cooked bark with alternating blows of the beating paddles, then gather the flattened mass and rotate it 90° to ensure all bark is evenly pounded.

Testing the pounded pulp

1. Drop a pinch of beaten fiber into a 1 quart clear glass jar of water. (Leave some air space in the jar.)
2. Affix the lid and shake vigorously for 20 seconds.
3. Note the dispersion of the fibers. If the fibers are separated and evenly dispersed, the resulting paper will produce an even sheet. If the fibers are clumped together in long strands, the paper produced will be a cloudier, more fibrous sheet. Depending on the paper desired, the pulp may need additional beating.

Storage: The paper pulp preparation is now complete. The pulp may be used immediately or stored (with the excess water removed) refrigerated for up to three weeks or frozen. If left unrefrigerated, pulp should be used within three to six days of preparation.

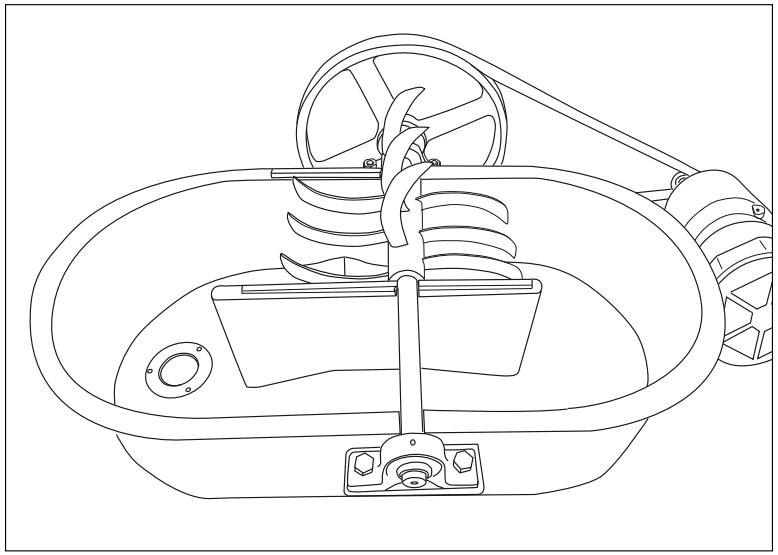

Naginata beater used to separate cooked kōzo, mitsumata and gampi – a modern day machine designed to defiber paper mulberry.

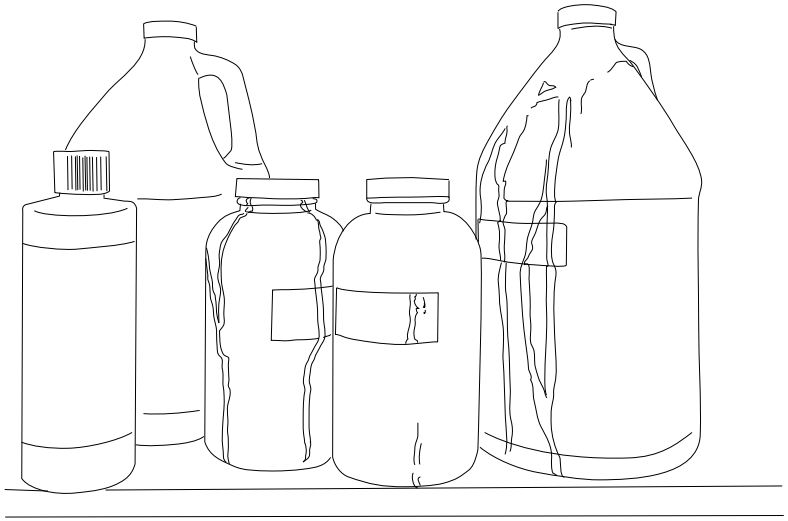

Pigmenting

Changing the natural color of paper can be done by dyeing the fibers or by adding pigment to the slurry. Chemicals known as dyes impart their color to the fibers, while pigments, not soluble in water, reside as particles among the fibers.

Pigments in general are more permanent than dyes and require fewer steps in their use. Finely ground particles of carbon black or colored earth (iron oxides, cadmium, zinc, etc.) are dispersed in water and added to the slurry. A chemical called a retention aid is then added to the slurry and acts as a magnet, attracting the pigment to the fibers so that the water runs clear.

Safety: *Powder pigments can become airborne and are a potential health hazard. Always use a dust mask when handling pigments in their powdered state. Water-dispersed pigments (already mixed with water) do not pose the same threat.*

Procedure:

1. Retention aid: prepare powdered retention aid at least one hour in advance. Sprinkle $^1/_2$ teaspoon of the powder into 1 quart of warm water; stir or shake vigorously. The solution is ready to use when all the powder has completely dissolved. (This stock solution should be thick and clear. It will keep without refrigeration for many weeks.)

2. Stir beaten pulp into a 5 gallon bucket of water. Carefully add water-dispersed pigment of the desired color(s) a few drops at a time. Stir with a whiz mixer or paint stirrer attached to an electric drill.

Note: *When the desired color and value are achieved, it is necessary to stir in some retention aid. The amount of retention aid necessary depends on the amount of pigment used. More pigment requires more retention aid. A minimum of each, however, is preferred. If, when matching a color, too much pigment is added, it should be rinsed out prior to retaining.*

3. Stir in 1/4 to 1/2 cup retention aid and check to see if the pigment is retained by squeezing a handful of pulp. If the fibers retain the color and the water runs out clear or almost clear, no more retention aid is need. If, on the other hand, the fibers release most of the pigment, add another small amount of retention aid and check again. In extreme cases as much as 3 cups of the prepared liquid retention aid may be needed.

Note: *If too much pigment is added, strange things will happen. For example, the pigment may not completely retain color; if it does, colored pulp may flocculate, looking like clumped, colored snowflakes in the vat due to an overly strong concentration of retention agent. Excess pigment may also transfer from the finished sheet to other surfaces.*

Liquid retention aid (in concentrated form) is available from some suppliers. Add in equal proportion to pigment, unless supplier instructions specify otherwise.

Dyeing

There are many varieties of dyes, most of which can be used to color paper fiber. The family of dyes described here are "Procion dyes." Procion dyes are fiber reactive and impart their color to each fiber. In general, dyes are not as light-fast as pigments; as dyes go, however, Procion dyes rank among the most permanent. Different batches of dyed and rinsed pulp mixed together produce a paper comprised of millions of individually colored fibers. This articulated effect cannot be well reproduced with pigments.

Safety: *Unfortunately, dyes are sold in powder form, are easily airborne and are toxic if inhaled or ingested. After dissolving in water, dyes can cause skin irritation and can stain skin and clothing. Therefore, use a respirator when handling dye in powder form and wear rubber gloves and an apron when dyeing.*

Procedure:

1. Dissolve 3 cups of table salt into 3 gallons hot tap water in a 5 gallon bucket.

2. Separately, add 1 to 2 tablespoons of dye (1/4 to 1/2 oz.) to 1 cup warm water. Stir until completely dissolved.

3. Stir the dissolved dye into the bucket of salt water.

4. Drain, then squeeze excess water from the pulp to be dyed and add to the dye bath. Stir continuously for 30 minutes if possible; otherwise, once every 5 minutes. Stir back and forth, up and down, not just in a circular motion.

5. During a 30 minute break, dissolve 1/4 cup soda ash into 2 cups of hot water.

6. Slowly add dissolved soda ash to the dye bath in 3 parts at 5 minute intervals, while stirring.
   (*Do not pour directly onto fiber*).

7. Stir intermittently for another hour.

8. Drain and rinse, flushing with cold water until rinse water runs clear.

9. Immerse in 4 gallons of hot water for the final rinsing.

Notes on final rinse: *Some papermakers tie the pulp in a silk stocking and wash with a mild detergent in a washing machine. Another technique is to add retention aid to the final rinse to try retaining dye extraneous to the fibers.*

For Deeper Colors: Use two to four times the recommended amount of dye. Going one step further, the dyed and rinsed pulp can be pigmented to deepen the color even more (see Pigmenting).

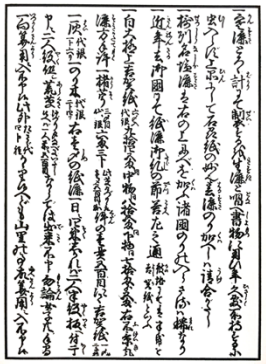

1. Paper made in winter, with tororo alone, is called "pure-molded paper" (kisuki-gami) and is used for books. It is very durable and resistant to insects, a fine quality paper and the choicest of Sekishū papers. Paper made in the spring, containing nori, cannot be so readily recommended.

2. Paper made in Najio, in Sesshū. contains nibe in addition to the foregoing. There are few provinces where nori is not added.

3. On the occasion of a recent official investigation of papermaking in a certain province–where hanshi is called Yoshika-gami–it was reported:

4. White, large-size, superior-grade Yoshika-gami is sold at 94 or 95 momme for 6 shime,- the second grade is sold at 85 momme for the same quantity, and the third grade is sold at 70 momme, or as low as 5 momme in bad times. Papermaking costs: (a) paper-mulberry wood: 6 momme, 3 bu per 3 kan (1½ kan after the branches are shaven); this 1 ½ kan weight makes 1 shime, or 2,000 sheets, of Yoshika-gami,- (b) ashes: 1 bu, 6 rin,· (c) nori-ki 2 bu, 4 rin.

Four soku of the shime just described can be made in one day. Now this requires two men, assuming they share the work of putting the paper to dry on boards, but with freshly cut wood, unless it is shaved at night, allowing 500 momme (weight) per man, this is not possible. Women, of course, take no account of labor. There is an extra cost of about 4 bu for firewood, but in a mountain village such as this it need not be considered.

Varieties of the Tororo Plant

The plant appears and flowers in the spring. It bears in the heart of the flower a fruit, small and hexagonal, resembling a sesame seed, or a louse. This fruit is of no value; it is rather the root which is used (see figure on next page). In form it resembles the cotton plant. The mountain tororo sometimes grows wild, without cultivation, and is used in the making of certain coarse papers, which take on a reddish color. The season is the same as that for growing soya and red beans.

Plants with wilted flowers are uprooted, dried and stored during the May rains. The roots are about an inch thick, and long, like those of burdock; those growing in stony fields are shorter.

They are sold 120 kan for 1 momme, or, when cheap, 500 kan for 1 momme.

The hairy skin is scraped off and the root beaten, the manner of preparation being the same as for tororo-jiru. As water is added, it becomes softer; a greater or less quantity must be used, as required.

About 1 ½ quarts should be added per vatful; it is strained through a cloth filter into a small pail and used as needed.

Mixing neri with cooked and beaten gampi pulp for pouring large sheets

Formation Aid (Neri)

Thin, even sheets of Japanese style paper would be difficult to make without the use of a thick, slippery, stringy starch called neri. Traditionally derived from the roots or bark of various plants, it is one of the key ingredients responsible for the magic and elegance of Japanese paper. This starch is blended with the water and fiber in the vat. Its unique characteristics prevent entanglement of the long fibers and slow drainage, giving the sheet-former time to distribute the fibers evenly on the screen. It also allows for the newly formed sheets to be couched directly on top of one another and later separated.

Plants traditionally used to make neri include:

Roots: Hibiscus Manihot (*Abelmoschus manihot*), called *tororo aoi,* and Strawberry Geranium, called *ginbaiso* or *imo nibei*. The roots of these plants are crushed with a mallet and soaked in water overnight to release the neri.

Bark: *Hydrangea paniculata*. The bark from this perennial is soaked in a mild soda solution to extract the neri. Neri derived from this source is called *noriutsugi*, *kawa neri*, or *kawa nibe* (bark neri).

Formation aid powder is a synthetic neri. Sold as *formation aid - PMP* (a cationic polyacrylamide) and *PNS coagulant* (an anionic polyacrylamide), both produce a slimy, thick liquid when mixed with water. Properly mixed formation aid should be smooth, slimy, stringy and very slippery; much thicker than heavy cream, but thinner than solid jelly.

Mixing Formation aid powder PMP:

Procedure:

1. While stirring, sprinkle 1 tablespoon of formation aid powder into 4 gallons of water.

2. Stir every 15 minutes for one hour. Be sure to stir up from the bottom of the bucket.

3. Let sit overnight and stir again prior to use.

4. Straining: Once the formation aid is prepared, the resulting "slimy" liquid may be added to the papermaking vat by straining through a painter's filter or a nylon stocking. To do this, fill a nylon straining bag with formation aid by dipping it into the bucket. Lift the filled bag over the vat and squeeze it through the bag and into the vat, thereby transporting and straining in one operation.

Note: A thick batch of formation aid is difficult to pour from a bucket. In fact, after pouring a little out, more and possibly all is apt to follow due to its stringy, follow-the-leader nature. Therefore, a straining bag is recommended to get formation aid from the bucket to the vat. It is easier and it eliminates lumps.

When to use PNS vs. PMP

PMP is a cationic starch and is the variety of formation aid most commonly used because it can be used with pigments, retention aid and fillers without causing flocculation problems.

PNS is an anionic starch and tends to coagulate the pulp when used in conjunction with retention aid and pigments. This speckled effect delights some and depresses others. Some suppliers are labeling PNS Formation Aid as Coagulant to avoid confusion.

Natural tororo-aoi neri can be made from fresh or frozen okra, commonly available from a grocer.

Procedure:

1. Crush okra pods.

2. Soak crushed pods in water overnight.

3. Stir prior to use.

4. Straining: Once the formation aid is prepared, the resulting "slimy" liquid may be added to the papermaking vat by straining through a painters filter or a nylon stocking.

Storage: Refrigerate to extend shelf life.

Contemporary Japanese vat, wooden stirring comb, sugeta suspension system and couching table

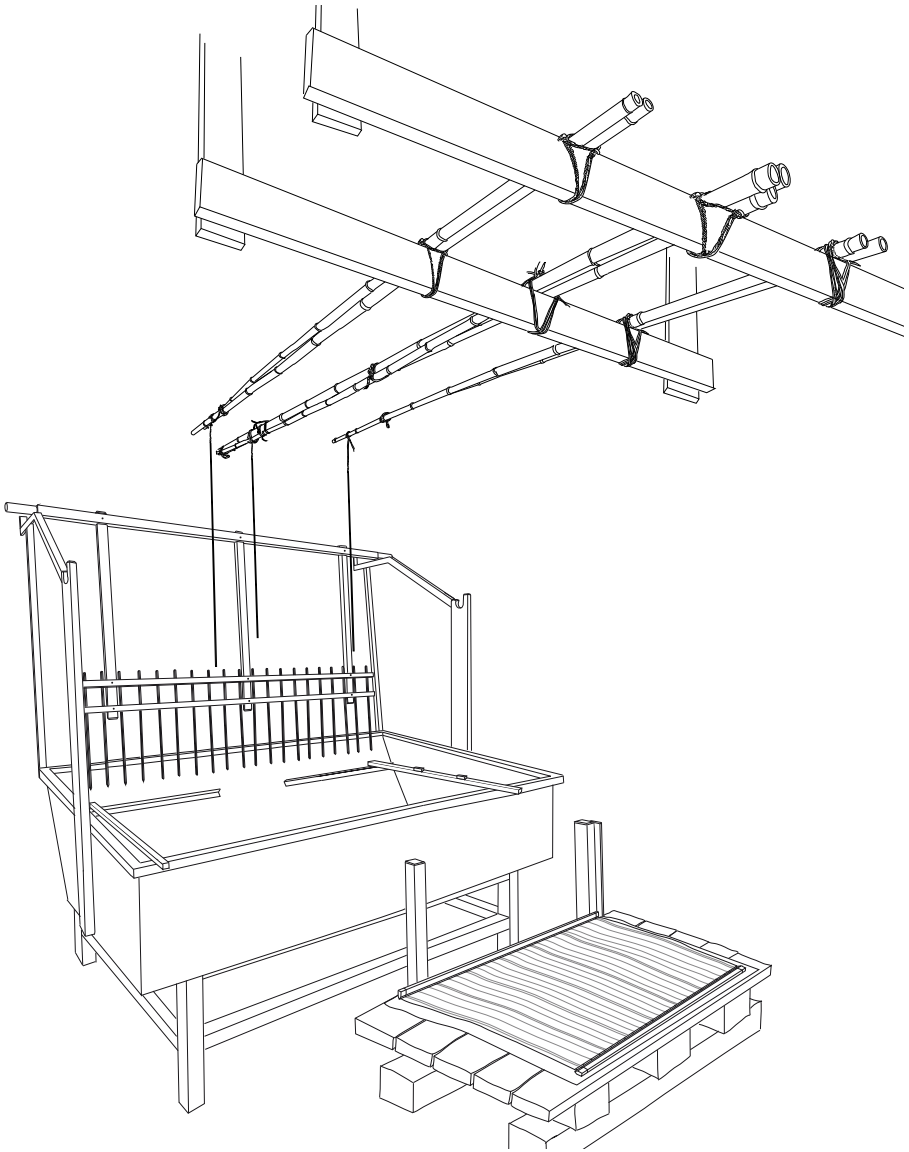

Contemporary stainless steel Japanese vat with wooden stirring comb and sugeta suspension system: The comb pictured here is in the storage position. When needed to stir kōzo, it is slid down the diagonal ramp and seated into its semicircular sleeve bearing cradle, centered on either side of the vat. The wooden sleeve bearing allows for the aggressive swinging motion required to stir the beaten kōzo and neri to create a well-fiber-dispersed furnish. This vat, suspension and comb is depicted from one found at the Awagami (papermaking) Factory.

Molding Hanshi (I)

The making of sugihara requires a heavy mold and is the business of men; hanshi is made by women. The quantity of beaten fiber to be molded, made previously into a firm ball and placed in a bucket, is scraped out, and the tororo, put through a strainer, is mixed in by stirring it round and round with a maseketa. If the stock is not viscous enough, more tororo is added, as required. One can tell when it is right by stirring with a bamboo stick until it has the consistency of funori. It should be well enough mixed to keep it from clinging to the bamboo; in any case, the more stirring the better. Because the hands get cold, water is kept on the boil to warm them in.

Molding Hanshi (II)

The entire mold containing the molded paper is set on the mold holder (keta-motase) at one's left, and allowed to drain; then a second mold is dipped, the paper from the mold just placed on the holder is couched, and the operation repeated as before. With practice, great speed may be attained. When so little pulp remains that dipping becomes difficult, the vat is replenished in the manner previously described. Any number of molded sheets may be stacked thus. The inside of the vat is a little less than 6 feet across.

"My hands are so cold I can't get this right!"

Sheet Formation

In Japanese papermaking, a sheet forming mould (*sugeta*) is dipped in the vat (*fune* or *sukibune*) several times to build up layers of fibers. The "furnish" or "stock" – a dilute slurry of fiber, cold water and formation aid – is scooped up and travels back and forth across the screen. The water and formation aid drain through the screen, depositing a mat of fibers. If the slurry drains too quickly, the pulp mixture needs additional formation aid. If the stock drains too slowly, add hot water to the vat and stir vigorously for five minutes, "slicing" the pulp with a stick. Another method is to strain water from the vat and replace it with fresh water.

Paper thickness is related to the amount of formation aid used in the pulp mixture, the amount of fiber in that mixture, and the speed of agitation during sheet formation and the number of times the mould is dipped prior to couching. The thinnest sheets require stock containing the most formation aid and a fast rocking and shaking motion. Heavy, thick sheets require little or no formation aid and a slower shaking motion. Too little agitation will result in a "cloudy" or uneven sheet.

Vat Preparation

Procedure:

1. Fill a vat halfway with cold water and stir in the beaten fiber. A typical utility sink vat will require about 1 lb. of cooked and beaten pulp.

2 Stir in the kōzo before adding formation aid. Check to see that the kōzo is well dispersed in the vat; be aggressive in your stirring. A stirring comb is a helpful luxury.

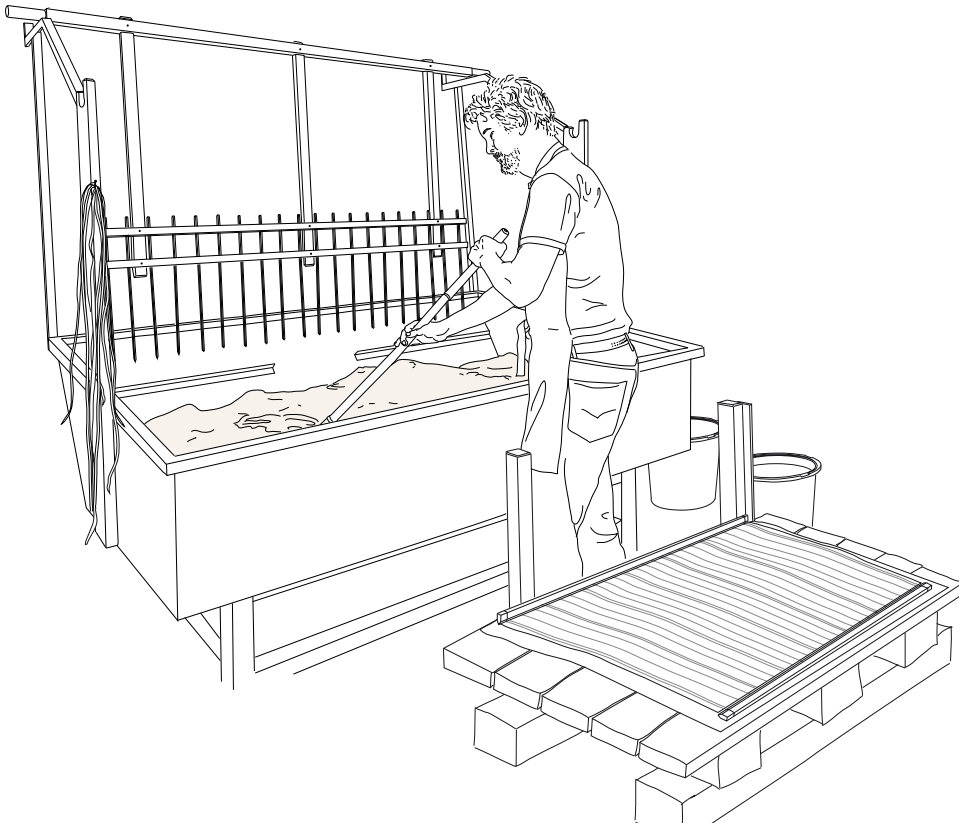

Slicing the formation aid (into the furnish): After adding and stirring neri into the vat of kōzo and water. with strong, deliberate strokes, the vat man cuts the neri-thickened-furnish with a bamboo stick (a *bashu*) moving from side to side in the vat. He adds to the speed of the stick by moving his left and right hand in opposite directions, accelerating the motion of the end of the bamboo. This makes a low, deep swooshing sound lasting only one second. This action is repeated many times, cutting the neri.

3. Strain in 1 to 3 cups of formation aid and stir vigorously. With a sturdy stick, slice through the furnish with fast, sure strokes. See illustration opposite.

In the image on the left, note that the moistened su behind the vatman, on the couching table, is touching the registration posts with its edge stick in the proper upright position, just where it will touch when couching. At the back of the vat sits the stirring comb (mase) used to stir in the kōzo prior to the neri addition.

4. As sheets are formed, more fiber and formation aid must be added to replenish the vat. To disperse the fibers more easily, stir in the fiber first and the formation aid second. Always slice the water with a stick after the formation aid is added.

I. Sheet Formation Using a Traditional Japanese Mould: Su and Keta (Sugeta)

A traditional Japanese mould is comprised of two parts, the *su* and the *keta* (together, the *sugeta*). The su is made of thin bamboo strips sewn together with silk or nylon thread. The keta is a hinged, double frame made of wood. Ribs on the lower frame support the su and two handles are attached to the upper frame. The su is held in the keta during sheet formation and removed with the wet paper clinging to it during couching (transfer of the sheet). Smaller ketas have no handles and are held by the short sides.

The first few dips using a traditional mould determine to a large extent whether the sheet will release easily during couching. In these "sealing dips" (*kumikomi*), the papermaker scoops up a small quantity of pulp on the front edge of the mould and makes it rush across and off the opposite side. This technique aligns the fibers against the grain of the bamboo screen, not parallel and entangled.

Procedure:

1. Soak the su in water (for a minimum of 5 minutes) prior to use. This swells the bamboo and tightens the su.

2. Sealing: Grasping the two handles of the keta, dip the edge of the mould closest to the papermaker (the front edge) into the vat and pull it forward in a short, scooping motion, picking up a small amount of stock. Quickly tilt the back edge down and let the stock spill off the far edge. Repeat this "sealing dip" two to three times.

Note: This first sealing dip (*kumikomi)* is a thin layer of pulp, barely visible, comprised of parallel fibers aligned against the grain of the bamboo. It prevents the slower moving pulp of subsequent forming dips from becoming entangled in the su, and enables the sheet to release during couching. Each sealing dip should take no more than two seconds.

Forming a sheet with a push and pull motion combined with tilting, keeping the furnish active with jumping waves, front to back and side to side. The arcing wave motions are similar to flipping an egg in a saucepan (without the use of a spatula). This motion ensures that any knots floating in the furnish will not settle onto the forming sheet: only the properly dispersed fibers settle and "weave" the sheet. Before this dip has completely drained, the vatman lifts the front edge of the mould at a steep angle; giving a flip to the far edge, the final wave (called *sutemizu)* is thrown off, sweeping away (and back into the vat) any knots that happen to be in the furnish within each dip.

3. Forming: dip the mould towards the back of the vat and pull it forward in a longer, scooping motion without submerging the mould completely. Tilt the mould so that the captured pulp travels back and forth across the mould surface. (The experienced papermaker creates a rhythmical sloshing as the stock falls back on itself with a rolling motion at each edge.)

4. Tilt the front edge up and gently throw off the remaining pulp of the first forming dip; then dip again before the remnants of the previous dip have a chance to drain completely. Shake and rock the mould from front to back, then side to side, "weaving" the fibers as they settle on the previous layer. Always throw off the last bit of a dip. (More drainage time between dips is necessary when making thicker paper.)

5. Repeat dipping four to seven times or until desired thickness is attained. After each dip, when there is little stock left, always tilt the front edge up and throw the pulp off the far edge. This thrown-off stock contains the undesirable large knots of fiber not allowed to settle during the swift motion of sheet formation.

(To couch using traditional Japanese method, see p. 68)

Note: With sealing dips the mould is dipped towards the front of the vat (closer to the papermaker) and the forming dips are dipped closer to the back of the vat (further away from the papermaker). In every case it is the lead edge of the sugeta (the closest edge to the papermaker) which is dipped into the vat and drawn toward the papermaker. The back edge is never dipped into the vat.

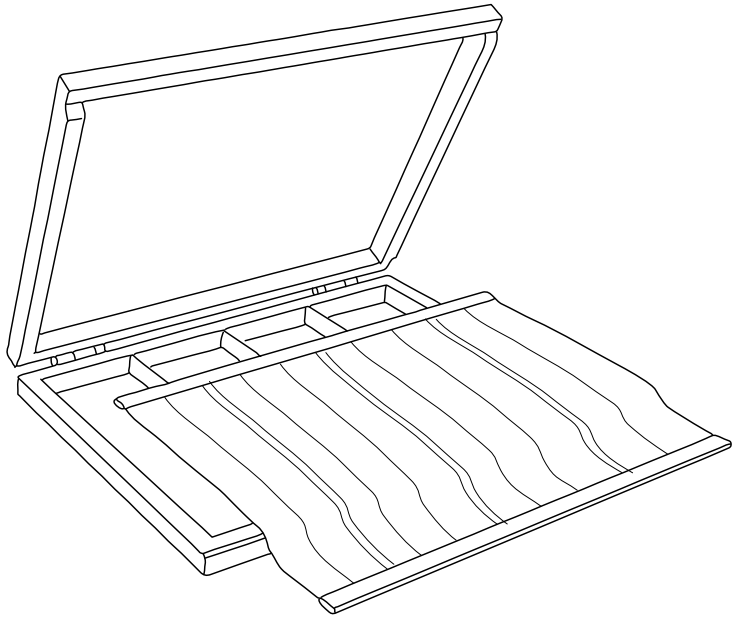

Sugeta – Su, the bamboo screen and keta, the hinged frame

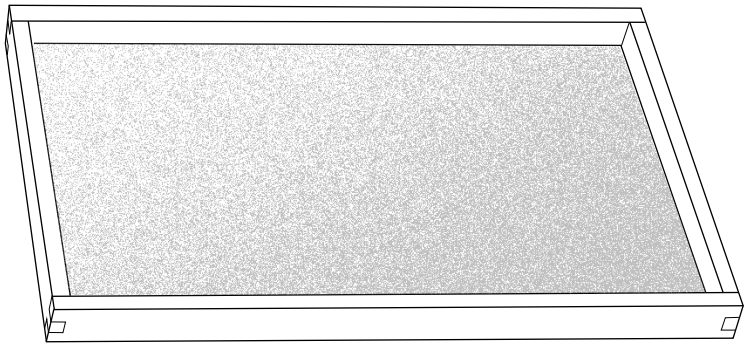

Large frame with tightly stretched mesh

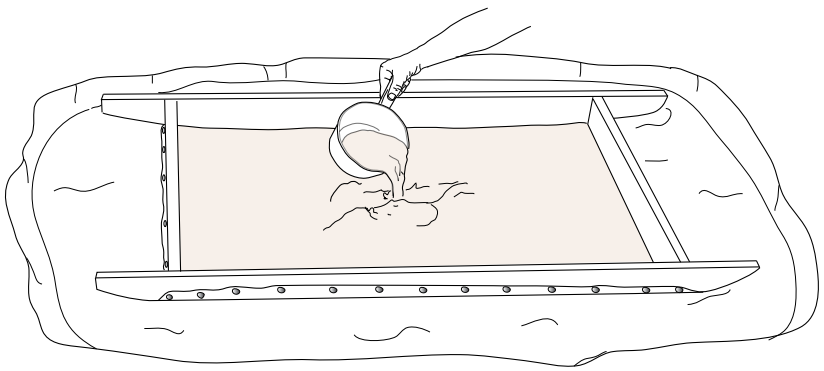

Pouring Nepalese pulp on a floating mould, one sheet per mould, to be dried in the sun

II. Sheet Forming, Large Scale — Pouring Method

Although sheets can be dipped from vats up to almost any size, at a larger scale it becomes easier to pour the pulp into the mould rather than dipping in the traditional manner described above. Pouring prepared pulp into a mould has long been the tradition in Nepal and is used by many paper artists today who make large scale works.

Large moulds can be made along the lines of any design; traditional Japanese, traditional European, or a simple frame stretched with a porous material such as coarse screen printing fabric, 38 mesh polyester screening, window screen, netting, or cheesecloth (like that found in Nepal).

Nepalese Method: Nepalese paper is made outdoors in the Himalayan foothills. The fiber used is a variety of daphne, prepared using similar methods to those described in this manual. A simple cloth-stretched mould is floated on a pool of fresh water; the pulp is poured into the floating mould, stirred, lifted with a tilting motion that distributes the slurry to each corner, forming an even sheet.

The primitive mould with its mat of wet fiber is stood at a steep angle and allowed to dry in the Himalayan sunshine. The paper dries directly on the mould surface. The sun-bleached sheet is peeled away from the cloth covering, freeing the mould for reuse. On a sunny day, three sheets can be made on the same mould. This age-old method of drying the paper on the mould necessitates that Nepalese papermakers utilize many moulds for a day's production. A Nepalese papermaking village is marked by the striking sight of a hundred moulds leaning to dry in the lush landscape of the Himalayas.

Procedure:

Choose a location where the floor can get wet.

Safety: Formation aid can make the floor very slippery. A rough, anti-slip floor surface is ideal. Hose down any spills.

1. Mix about 1 pound of cooked and beaten fiber with water in a five gallon bucket. **Strain in approximately 1 quart of formation aid and stir vigorously.**

2. Place the mould in a horizontal position on sawhorses or table. Pour the prepared pulp onto the screen, flooding the whole surface as evenly as possible. Tilt the mould to move the undrained pulp around the surface, spilling as little as possible.

Note: *Many different colors of pulp can be prepared and poured onto the screen creating beautiful, subtly gradated sheets (see Pigmenting and Dying).*

3. Build the sheet up to the desired thickness by pouring subsequent layers of pulp as in step 2. If subsequent pouring disturbs earlier poured layers, it is an indication that not enough formation aid was used in the prepared pulp or the previous layer of pulp had not sufficiently drained.

Note: *Wait for the shine of the freshly poured pulp to disappear before pouring an additional layer. This should take no more that two minutes.*

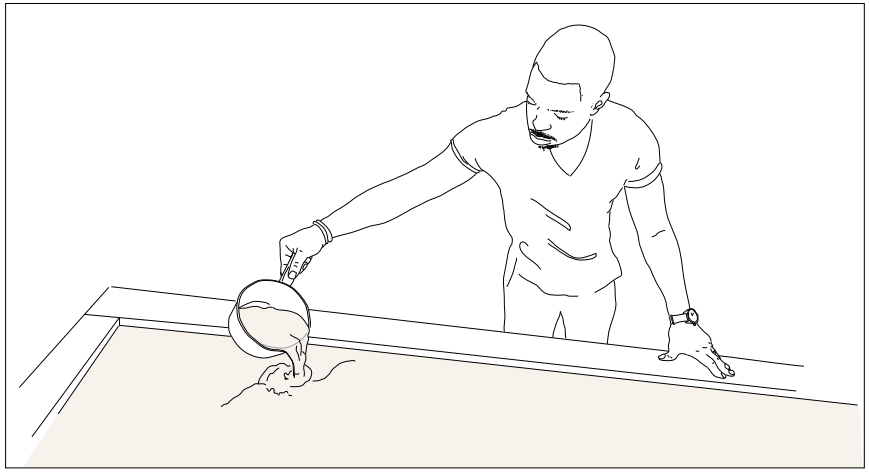

Slowly and carefully pour thick neri furnish, building up a sheet without disturbing the fibers already drained and set.

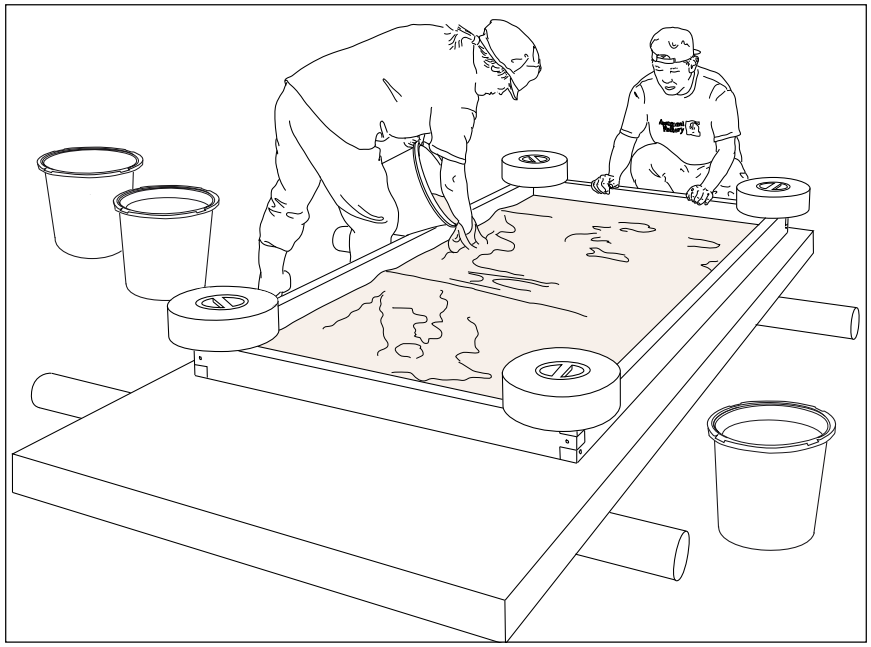

Big pour method: On a roller platform (as illustrated above) place a tight-stretched, mesh-covered mould on multiple layers of coarse screens, cut slightly larger than the mould, to allow for slow drainage. Clamp or weight the mould so it sits firm to the platform. Next, pour all prepared pulp in one go, obstructing the flow from the bucket with your hand to slow the force of the pour (multiple people pouring is helpful). Next, settle the fibers with a gentle forward and back rolling motion. Waves should travel the distance of the mould. Allow the pulp to drain and the sheet to dry on the mould. Floor drainage is necessary for this technique.

III. Sheet Formation Using a Traditional Western Mould or Student Mould

Japanese paper can be made on a Western mould using kōzo and formation aid furnish as described above. Sealing dips are required when using a laid mould and deckle. *(see p. 54)*

A **traditional Western mould** is comprised of two parts, the "mould" and the "deckle." The mould is a screen-covered wooden frame where the screen is supported by ribs that run the shorter length of the mould. Unlike its Japanese counterpart, a traditional Western laid mould's screen covering is permanently affixed to the mould. The screen (laid or wove) is sewn down to the ribs (along the chain lines for laid screen) and fine brass nails (escutcheon pins) hold the screen around the perimeter of the of the wooden frame.

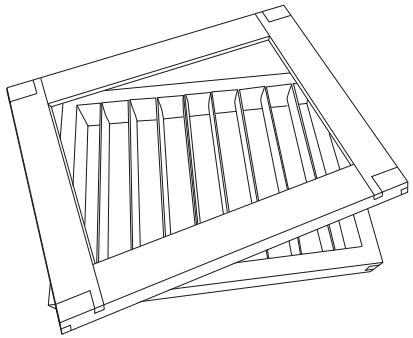

The basic design of the wooden components of a Western (ribbed) mould and deckle (no screen).

Simple student-type Western moulds are generally made with stretched 38 mesh polyester screening and do not have ribs. Once the polyester mesh is affixed to the perimeter of the mould, it is gently heated with a hair dryer or heat gun to tighten the screen. The **deckle** is a wooden frame which fits over the mould designed to capture the pulp during sheet formation.

Procedure:

1. Holding the short sides of the mould (fitted with the deckle) almost at arm's length in a vertical position, dip the front edge of the mould towards the back of the vat and pull it forward in a scooping motion without submerging the mould completely. Bring the mould, now filled with pulp, to a horizontal position.

2. Shake the fibers from front to back, spilling as little as possible.

3. Before dipping again, allow the pulp layer to drain so that the surface is no longer glossy.

4. Dip again, shaking mould alternately from front to back and from side to side, "weaving" the fibers as they settle onto the preceding layer.

5. Repeat dipping four to seven times or until desired thickness is attained.

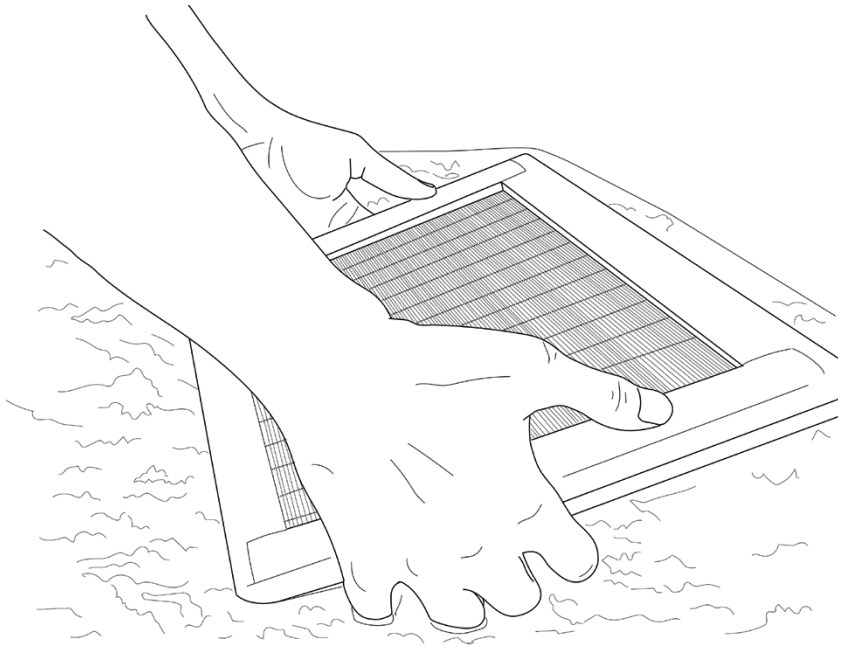

Forming a sheet using a traditional Western ribbed mould and deckle or student-type mould and deckle

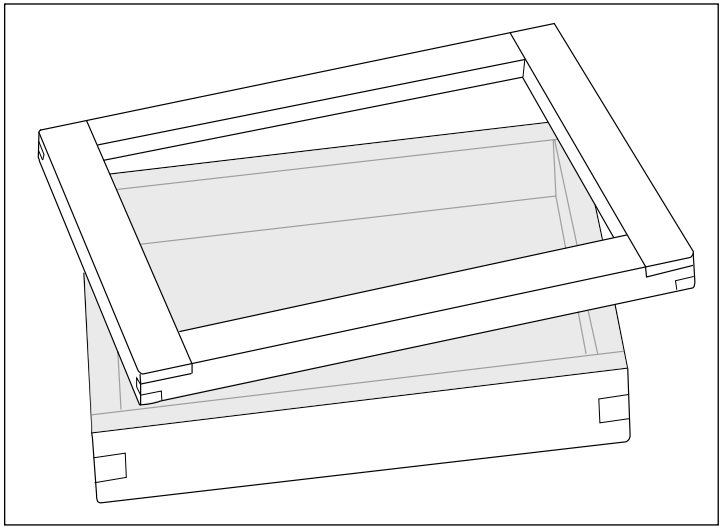

Student mould: A simple mould (no ribs) with a drainage surface comprised of a stretched polyester screen and a deckle.

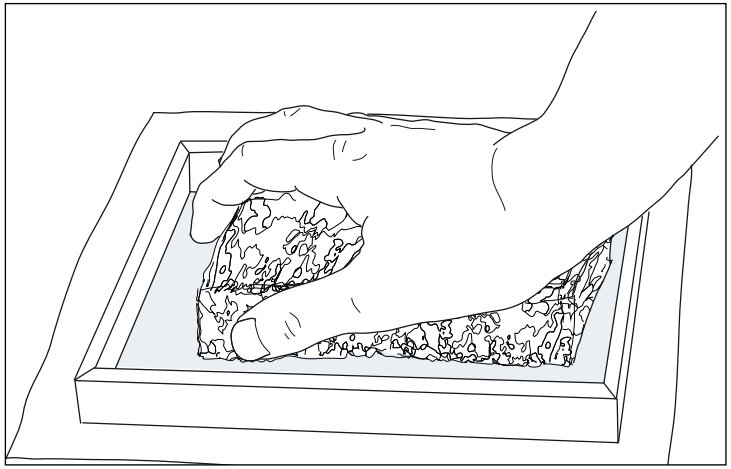

Couching a sheet formed on a student mould: Invert the mould face down on interfacing then de-water from the back side a sheet with a sponge. This transfers the sheet to the interfacing. Start with light pressure, so as not to disrupt the sheet; build up to strong, firm pressure.

Couching

From the French verb *coucher* meaning "to lay down," couching is the process of transferring the formed sheet from the mould surface. This can be done several ways and depends on the type of mould used.

With the exception of elementary moulds like those still used in Nepal, where the paper is allowed to dry directly on the cloth-covered mould, couching is necessary to allow multiple-sheet formation with a single mould.

Note: *Using these techniques to couch paper from large moulds can be accomplished only if the mould is constructed along the lines of traditional equipment.*

I. Couching Using a Student Mould
(or coarse silk-screen)

Procedure:

1. Invert the freshly formed paper sheet onto a piece of interfacing (Pellon™).

2. Sponge from the back of the screen to loosen paper onto interfacing.

3. Carefully remove mould.

4. Cover the paper with a second sheet of interfacing if more sponging is required.

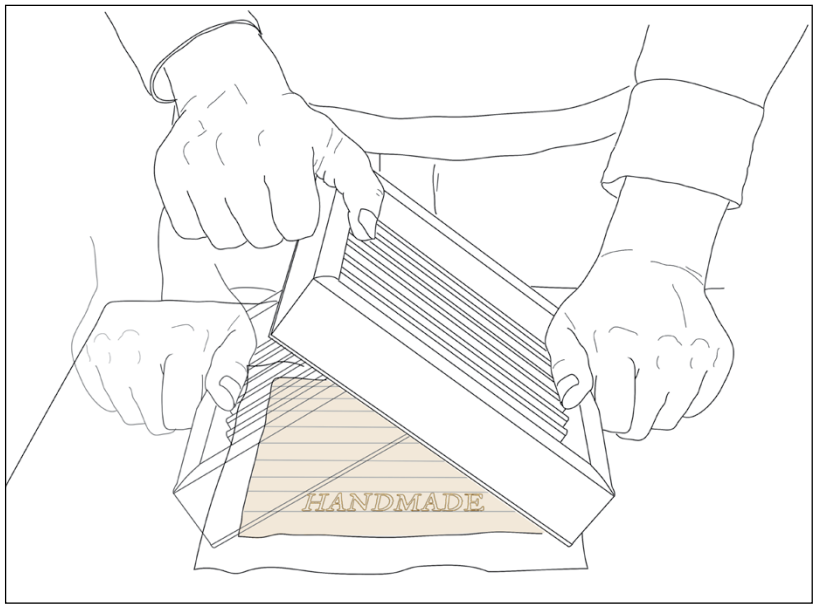

Western style couching: with a rocking motion, quickly apply firm pressure when mould is flat – like a little nudge half-way through the couch.

II. Couching Using a Traditional Western Mould

Transferring the formed sheet from Western moulds requires a moist felt, over which is placed a moist sheet of interfacing.

Procedure:

1. Invert the freshly formed paper sheet onto a piece of interfacing and felt.

2. When the face (sheet forming surface) of the mould is face down, apply sufficient pressure so that water can be seen rising (seeping/glistening) through the back of the screen.

3. As the water becomes visible, continue downward pressure on one edge of the screen while gently lifting the opposite side of the mould until it is completely elevated and the paper is released. This should be done in a single rocking motion taking approximately 3 seconds.

4. Cover the paper with a second sheet of felt or interfacing.

5. Continue couching, alternating felt/interfacing and paper.

Note: *If the newly formed paper is not transferring easily to the moist interfacing:*

- *Be sure to couch before the sheet is overly drained*
- *Use firm downward pressure*
- *If you are using a laid mould, review the sealing dip technique (see p. 54)*
- *Build up a thicker sheet using more dips and more fiber in the vat*
- *Couch on an arched couching table surface for better screen-to-felt contact*

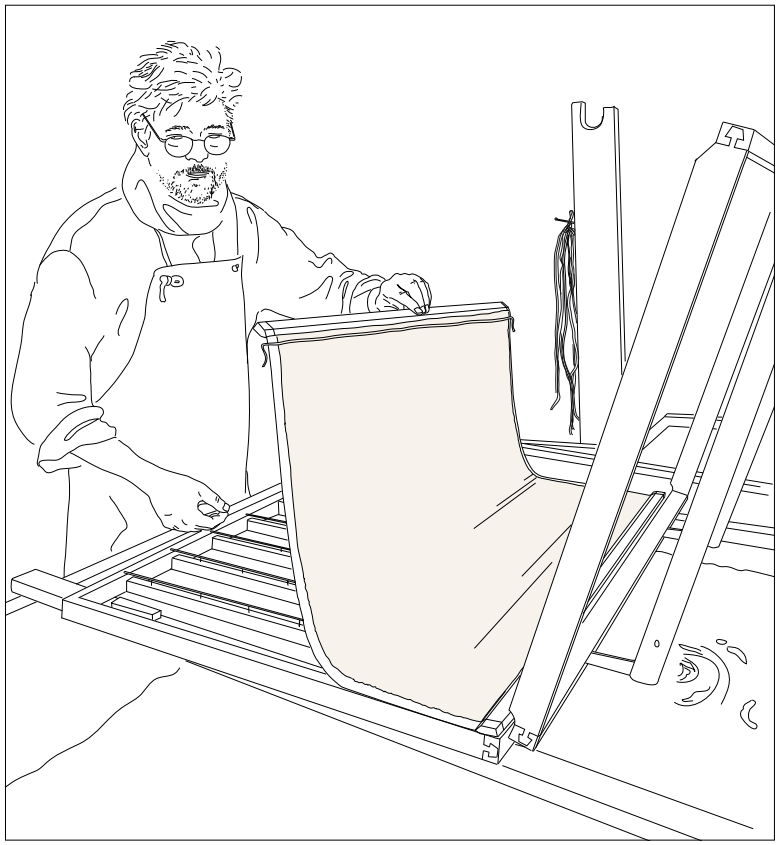

Lifting the front edge stick of the su with the left hand – the right hand is seen here relaxed and in position to grasp the far side su stick as it moves toward the vat man. Note the ribbon sheet marker has already been laid on the newly formed sheet, along the lead edge of the paper.

III. Couching with a Traditional Japanese Mould

(sugeta – keta and su)

When using a traditional Japanese mould (keta and su), sheets are couched using the following method:

Procedure:

A. Have numerous flat ribbons at hand, cut 4 inches longer than the paper's long edge.

1. Allow the newly formed sheet to drain for a few seconds (depending on thickness). While draining, open the mould, choose a flat ribbon, stretch it with both hands and place it on the damp sheet ¼ inch in on the long (front) side.

2. Remove the su by grasping the near "edge stick" with your left thumb on the underside. Lift the

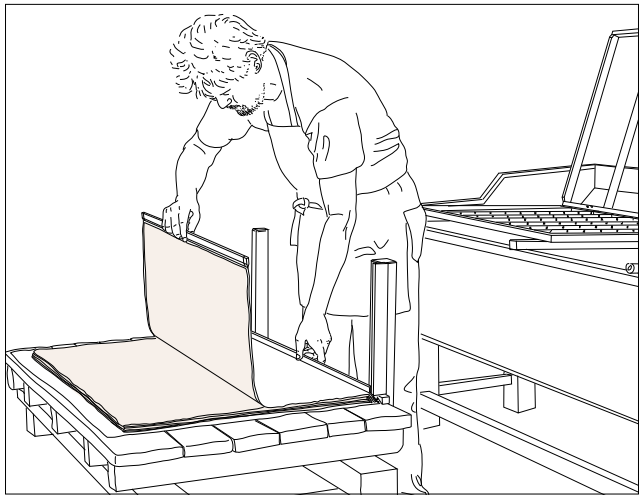

Keep the su at a 90° angle as the sheet is lowered onto the post to prevent air being trapped between sheets during the couch. As in Western couching, one may detect a slight hint of moisture rising through the su where its angle changes due to the pressure of lowering it in such a fashion. As this bead of moisture falls back into the sheet, it helps "rinse" the sheet from the su, making for a "clean couch," leaving the paper on the post and the su clean of fiber.

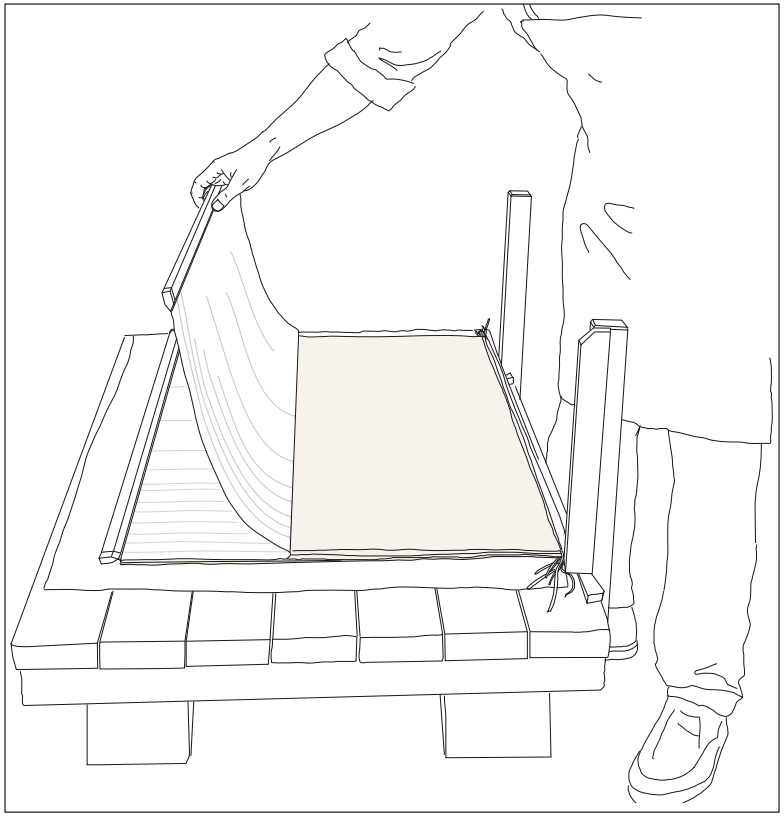

Lifting the lead edge stick of the su up and back deposits the sheet onto the surface of the post. When done quickly and correctly, listen for a lovely and rewarding hiss, indicating all is well with the couch and the growing post. At the last second of this graceful motion, you will hear a slight snap as the su stick at the far edge is lifted and separates from the post. The side of the su used to form sheets alternates so after couching, lay the su face down on the keta for the subsequent sheet. This alternating formation side ensures a clean su, as each face is washed with every other formation sequence.

su with that hand straight up. The paper should remain unharmed, clinging to the surface of the su.

3. Grasp the other side of the su with the right hand, placing your thumb on the back side of the su. The su is now dangling perpendicular to the ground, held mainly with the left hand.

4. In an arcing motion over your left shoulder, invert the su, transferring the weight to your right hand. Plant the lead edge of the su (in your left hand) where it is to be couched (see registration posts in illustration at left). At this point, the su is perpendicular to the board.

5. Keeping the su perpendicular, slowly lower the edge stick in your right hand and simultaneously move toward the far side of the post letting the paper come into contact with the previous sheet. Couch with a sharp curl per illustration at left. If the paper is laid down with a gentle curl, air is trapped under the paper, making subsequent couching more difficult.

6. Fold over the near edge stick of the su, push down and lift up a few times with a flicking motion, releasing the front edge of the paper.

7. Remove the su by lifting the lead edge up and back, gracefully drawing the entire su away from the new sheet at a 45 degree angle. This should make a perfect hissing sound: the music of a good couch on a well formed post.

8. Sheets are couched directly on top of one another, separated only by the ribbon (place on each sheet just prior to couching) which serves to mark and later help to separate each layer (sheet).

Note: interleaving the sheets with interfacing as described in the previous two couching methods ensures an easier time parting the sheets.

9. Use the opposite side (surface) of the su for each subsequent sheet.

10. At the end of the papermaking session, rinse the su and hang it to dry. Store the dry su rolled in acid-free tissue.

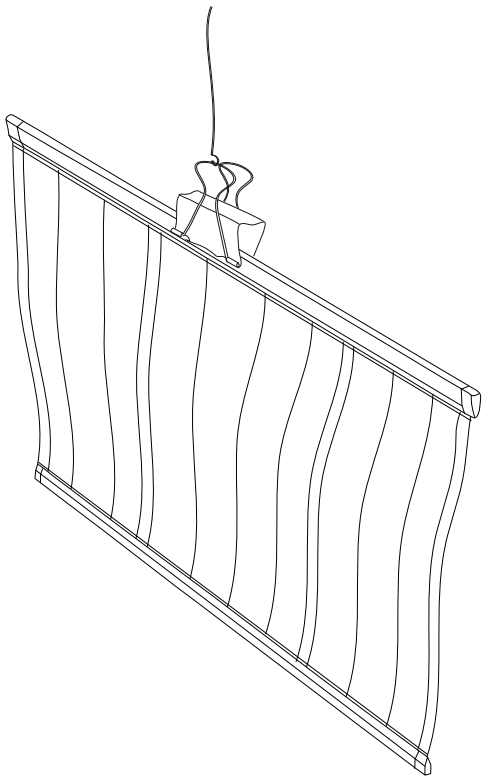

To ensure release of paper from the su:

1. Use high quality fibers and proper preparation. Overcooking or too much beating can cause fibers to become entangled on the su.
2. Remember to perform proper, **quick** sealing dips **across the grain** of the bamboo. These dips align fibers perpendicular to the bamboo of the su forming a grid that enables a good couch. Also, scoop only a small quantity of pulp from the vat when making your sealing dip – about ¼ of a normal dip. (Sealing dips are the first two or three dips of each sheet - see p. 53 step 2). In subsequent dips, after the fast sealing dips, use a lively, consistent rocking action during sheet formation.
3. Avoid letting the paper drain too long prior to couching on interfacing (although longer draining is fine when couching thick sheets or traditional style, paper against paper).
4. Couch on a very flat, smooth surface.
5. Avoid trapping air under the paper while couching. (Air bubbles can be sucked out with a straw.)

Note: *In general, a felt or absorbent material placed under the interfacing is not a good idea. Absorbent material tends to pull the water necessary for sheet transfer away from the su.*

Paper remembers the surface texture on which it is pressed and dried:

Whether a smooth or a weather-textured wood with strong grain, paper remembers and bears witness to that surface for the rest of its life.

Pressing

The removal of water from the newly formed sheet or sheets is common to all papermaking. Depending on the equipment available, the sheets are either squeezed in a press, vacuumed or simply sponged. **If paper is made in the traditional method (without interfacing between each sheet), very slow (overnight) and gentle pressing is required**. The following describes four methods.

I. **Using a Sponge** (single sheet)

Procedure:

1. Cover the freshly couched sheet with a protective piece of interfacing.

2. Sponge, gently at first, until much of the water has been removed.

3. Remove top sheet of interfacing.

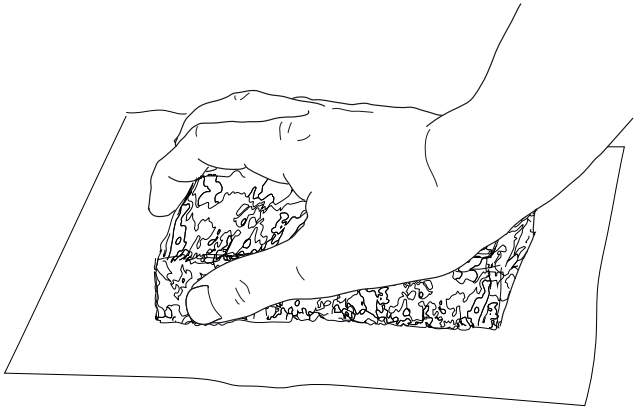

II. Using a Vacuum Table

A vacuum table is ideal for the artist making individual large sheets, art pieces and three dimensional work. In general, vacuum tables used for papermaking consist of a pump and a water catch connected via a plastic hose to five or nine holes tapped into the underside of a waterproof table. It is necessary to place breather mesh or two layers of window screen (or both), cut a minimum of two inches smaller than the table, over the holes. These two layers of window screen and breather mesh create pathways for the water and air to exit while vacuuming. On top of the window screen place the interfacing and the newly made paper, followed by another layer of interfacing. Moisten and cover the whole table with one or two sheets of plastic. Under a vacuum, the plastic is drawn down tight to the paper and in about three to five minutes much of the water in the sheet is removed. One to three sheets of paper may be vacuumed at one time.

Procedure:

1. Couch directly onto a piece of interfacing atop the table (with two layers of window screen beneath). Cover the freshly couched sheet with a protective piece of interfacing. Moisten the table all around the interfacing.

2. Lay a large sheet of plastic over the interfacing, extending at least two inches beyond all sides. To help maintain the seal between the plastic sheet and the table, smooth all wrinkles and make sure there is a film of water between the plastic and the table.

3. Turn on the pump; the plastic should suck down against the paper, pressing the paper and removing water in the process.

4. Drain the water catch at the end of each day or before half full.

3. Turn on the pump; the plastic should suck down against the paper, pressing the paper and removing water in the process.

4. Drain the water catch at the end of each day or before half full.

Vacuum Table Basic Design

Cross Section:

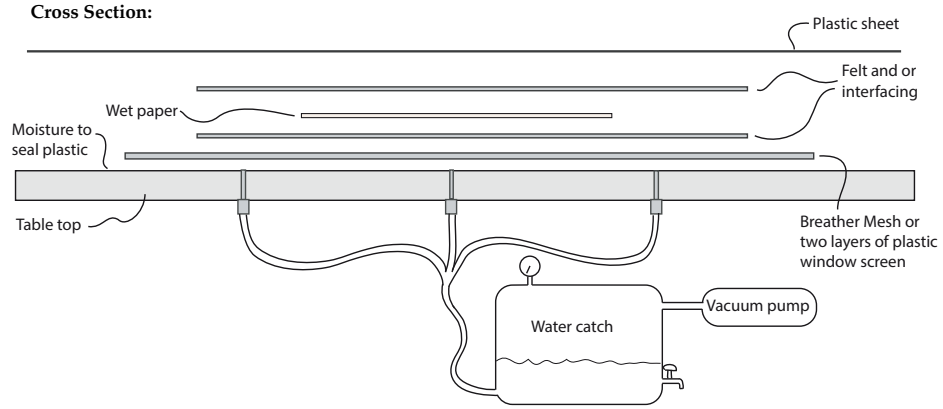

Top view:

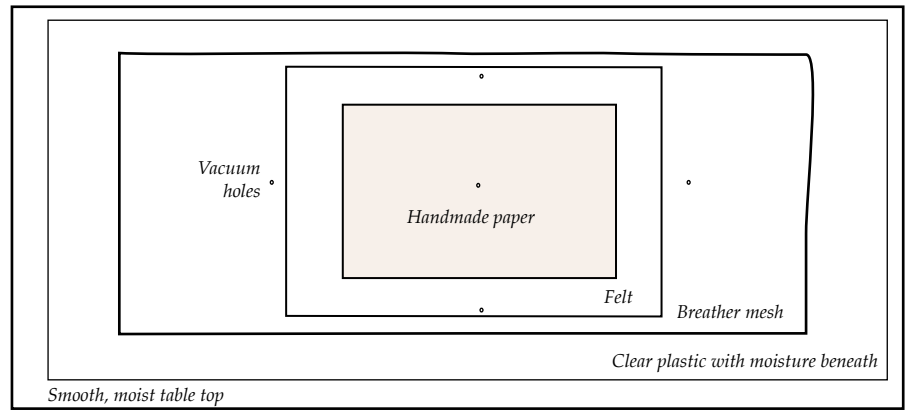

III. Screw or Hydraulic Press Method
(with or without interfacing between sheets)

Using heavy equipment such as a mechanical screw or hydraulic press, the papermaker can squeeze water from hundreds of sheets in one pressing.

Procedure:

1. Place 2 woollen felts, followed by a board and a 5 gallon bucket of water, on top of the newly formed stack of paper and interfacing. Let stand overnight.

2. The next day, remove the 5 gallon weight.

3. Slide the stack squarely into the press. Take the press up to pressure very slowly, watching the paper "weep." Leave the post at maximum pressure for 5 minutes.

4. Release pressure and remove from press.

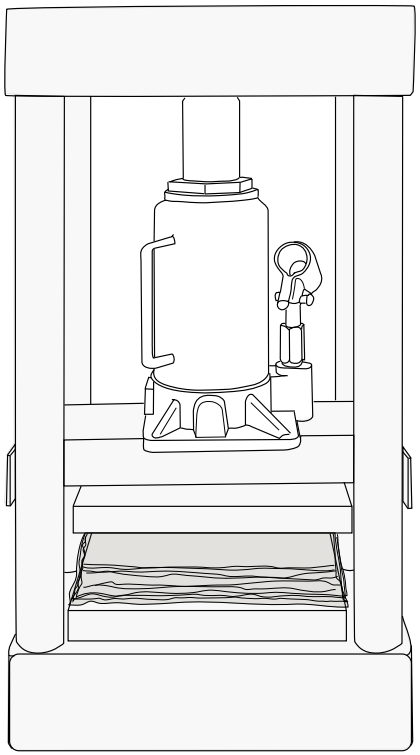

Small Hydraulic Press

IV. Outdoor Bucket Pressing

This simple, but wet, method is perfect when making a production quantity of smaller paper. Hundreds of sheets may be pressed at the same time, yet no heavy equipment is required.

Procedure:

1. Follow steps 1 and 2 above.

2. Next, cover post with a sheet of plastic and set a 30 to 55 gallon garbage can on top of the plastic covering the post.

3. Let a hose slowly fill the garbage can overnight. Overflowing water should spill on plastic to the ground, not on the paper.

Alternately, build a simple lever press per the illustration below. Hang weights or a bucket filled with water; mechanical advantage is always appreciated.

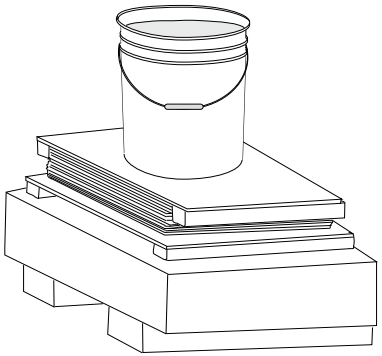

Bucket Press

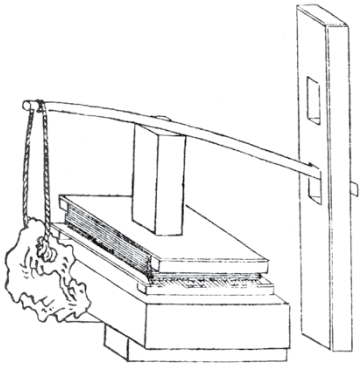

Lever Press

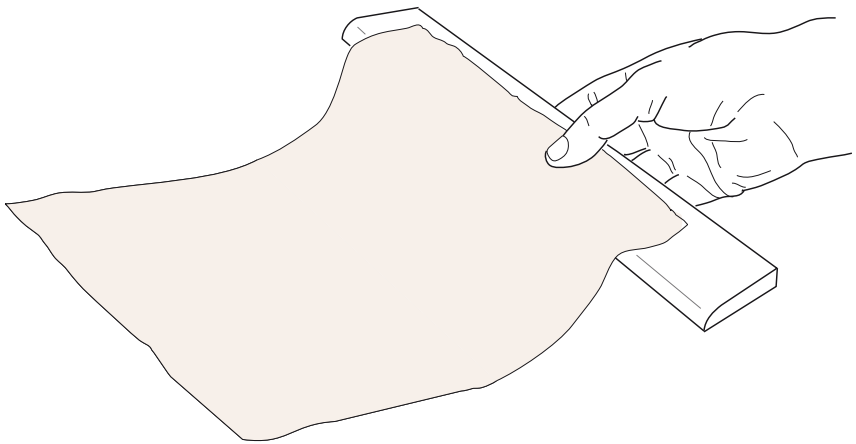

Use a "slice" to handle delicate sheets

Parting

Japanese paper formed and couched in the traditional method is layered one sheet onto the next with only a thred or ribbon in between the sheets as a marker. The separation of these sheets after pressing can be accomplished as follows.

Note: *Placing interfacing between each sheet during couching is slower and nontraditional, but reliable.*

Procedure:

1. Remove post from press and lift off the boards and felts.

2. The threads are now used to locate and separate each sheet in the stack. By pulling the top thread upwards and outwards at a 45° angle, the edge of each layer is freed, allowing the sheet to be picked up.

3. Pull each sheet away from the others by starting at a forward corner and pulling diagonally back across the post at a 45° angle.

4. As each sheet is separated, it is brushed onto a board for drying. (see Drying p.83)

Parting Notes:
To ensure successful parting after pressing (when sheets are couched in the traditional style, paper on paper):

1. *Press the post slowly.*
2. *Avoid letting the paper run dry between dips during sheet formation. (Long pauses between dips may cause the sheets to delaminate during parting.)*
3. *Pressing a second time with dry felts if needed.*
4. *Torn sheets may be stirred in water and remade.*

Drying the Paper

Five sheets are spread on the front and five on the back of a 6-foot board, as shown. One edge of the sheet will be a little thicker, and this is picked up first by looping it over a bamboo stick, as illustrated. The sheet is then smoothed out with a straw broom held in the right hand, which requires some degree of skill! In sunny weather the paper will dry quickly, but in rainy weather it may be hung over a fire to dry.
One person should be able to attend to 40 drying boards. The side spread against the board will be the "right" side of the paper.
This board (lower left) is called the "bed."

Drying

One major advantage of making paper in the Japanese tradition is ease of drying. Whereas most Western or cotton rag papers will shrink and buckle if brushed onto a board, Japanese paper shrinks very little and therefore will dry flat, gently stuck to the drying surface.

I. Drying paper on a board (called *hoshi-ita*)
Drying surfaces include wood, Formica, Plexiglas, smooth stucco walls and stainless steel. The latter two are often heated with steam or fire to accelerate drying.

Procedure:

1. If the paper pressed overnight was interleaved with interfacing, apply the paper to the boards holding the interfacing and invert the paper onto a smooth surface selected for drying.

1b If only ribbon was placed between sheets pressed overnight, lift the first ribbon to find the edge of the top sheet and handle the paper directly – a Western slice (smooth stick) may be used to transport wet sheets if the paper tends to tear (see "Parting" above for more).

2. Using a wallpaper or a traditional Japanese drying brush, brush the interfacing (or in the case of Japanese style, brush directly on the paper), working from the center outwards to bind the paper to the drying surface, then carefully remove the interfacing.

3. Using dilute rice paste and a small brush, apply the paste around the perimeter of the sheet.

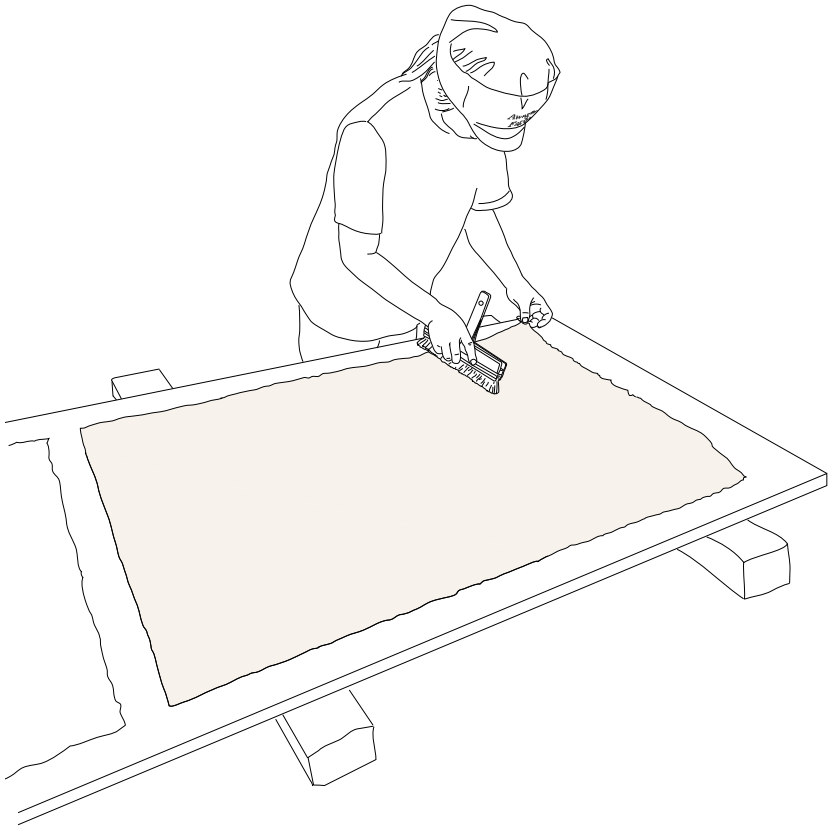

Brush from the center outward to smooth paper onto a drying board. Seen above: a corner is lifted and brushed back down, smoothing a momentary wrinkle. Next, with a watercolor brush, apply dilute rice paste around the edges. Scrub the drying board with a wet terry cloth towel between each drying sheet.

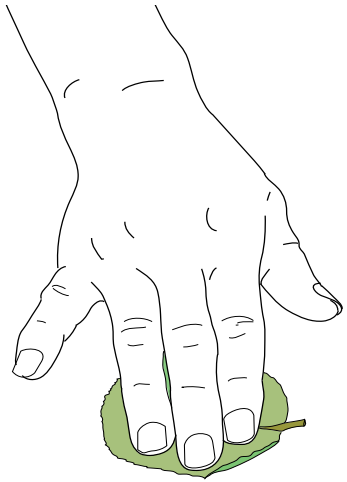

Polish with a camellia leaf to consolidate stray fibers while the sheet is still damp on the drying board.

4. Allow paper to dry in a humid environment while still adhered to the drying surface.

5. When the paper is dried and not cold to the touch, the paper will peel from the drying board without effort. Scrub the board prior to the next drying cycle.

Drying Board Notes:

If sheets peel or buckle during drying:

1. Clean the board prior to use with a moist terry cloth towel.
2. Try greater saturation of the edges of the paper with watered-down paste.
3. Apply the paper to the board by brushing with more pressure & with more moisture in the sheet.
2. Wait until paper is completely dry before lifting edges.
3. Do not beat pulp in a Hollander beater.
4. Slow down the drying process with more humidity.

If the sheets tear during removal:

1. Check that the paper is truly dry. It should not be cold to the touch.
2. Check that the drying surface is clean.
3. Use a very light coating of wax on the drying surface if sticking problems persist.

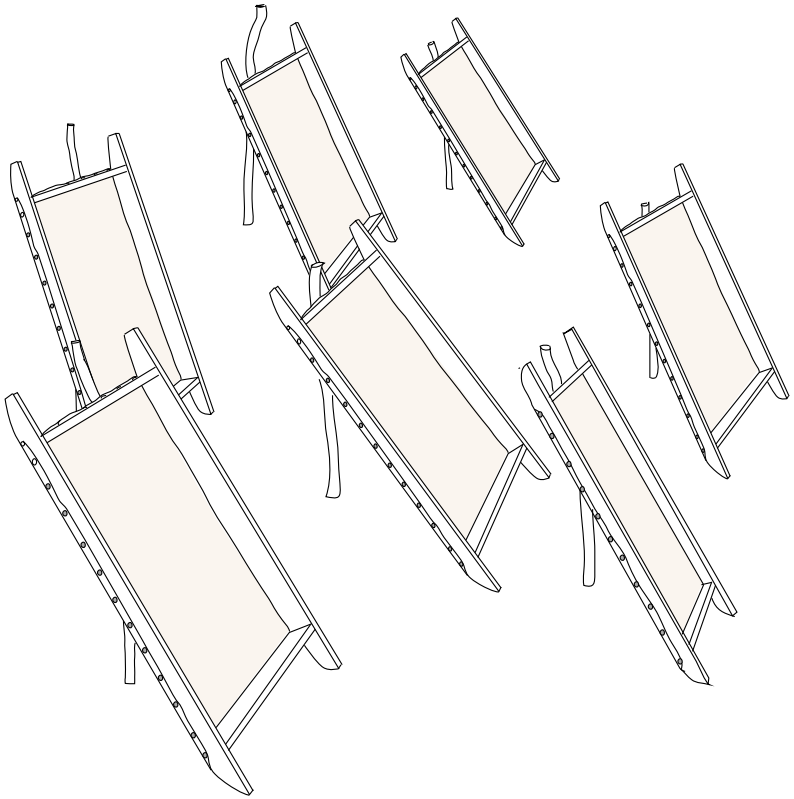

Nepalese paper, one sheet per mould, drying in the sun

II. Drying Sheets on the Mould

When using a silkscreen type mould or a stretched mosquito netting mould, simply allow the paper to dry attached to the mould screening.

After pouring (or couching) the sheet and allowing it to drain for an hour or so the mould may be leaned up at an angle to speed drainage and drying. **The paper is dry when no longer cold to the touch.** Peel away from one end carefully.

To speed the drying process, a wet-dry vacuum can be used to remove water from the newly formed sheet. Tightly stretched, large mesh silkscreen moulds work best for this technique. Simply vacuum the water out from the **back side**, holding the nozzle right up against the fabric of the mould. The ideal nozzle attachment is one with a long thin register commonly used for hardwood floors. I'm always amazed at how well this works.

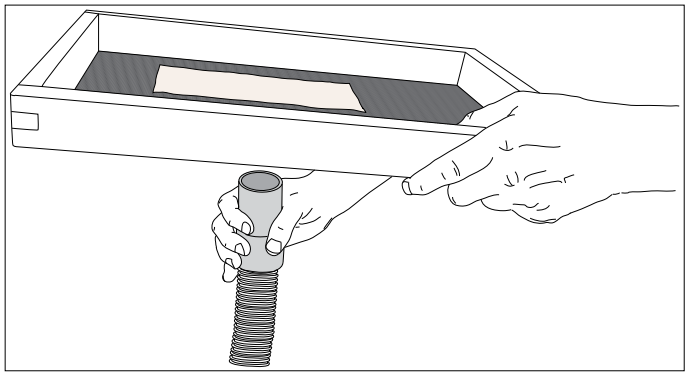

De-watering with a wet-dry vac from the back side of a silkscreen frame on which a small sheet was couched.

III. Hanging sheets to dry for maximum texture

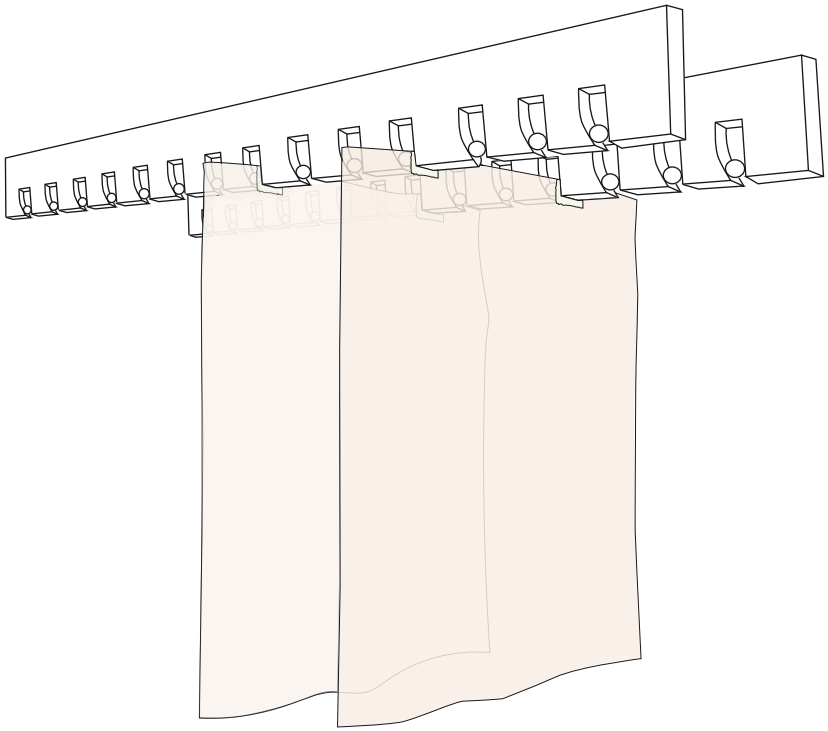

Paper hung to dry using an innovative, gravity-assisted marble design. Note protective paper tabs where the marbles touch the paper.

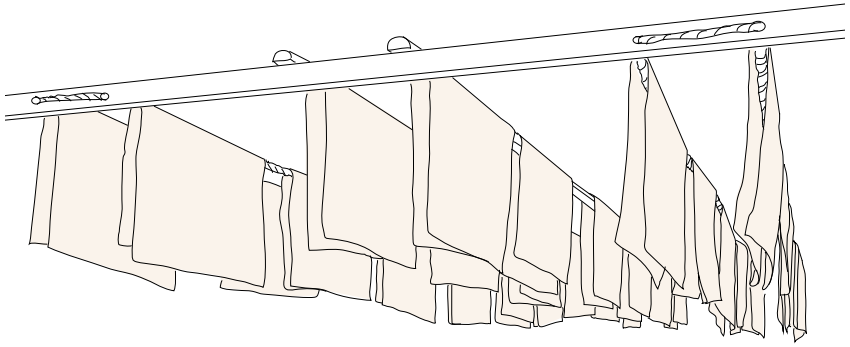

Sheets hung on horse hair rope and rounded poles to dry

Sheets hung to dry unconstrained will retain a maximum of surface texture. A variety of hanging methods may be used; traditionally sheets are slung over ropes or poles (below), but newer methods such as the design at left, which uses marbles to hold the sheets in place, are also useful.

Alternative Western Paper Drying System

(Also works with Japanese washi)

IV. Box or Stack Dryer Configuration

Drying under pressure while removing moisture

Using precisely cut sheets of double-wall acid-free corrugated cardboard, blotters and mat board, a multi-layered high rise stack of air-permeable layers interlaced with damp sheets will dry paper under pressure (constrained). Pressure is needed to keep the stack firmly held in place as air is blown through the flutes drying the paper overnight.

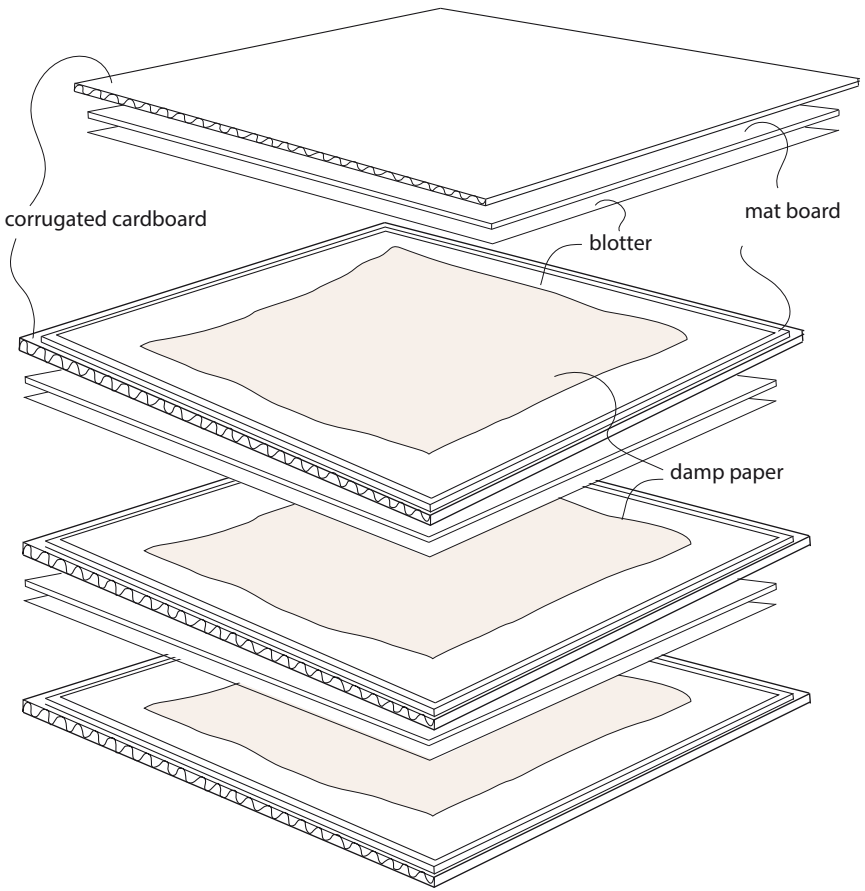

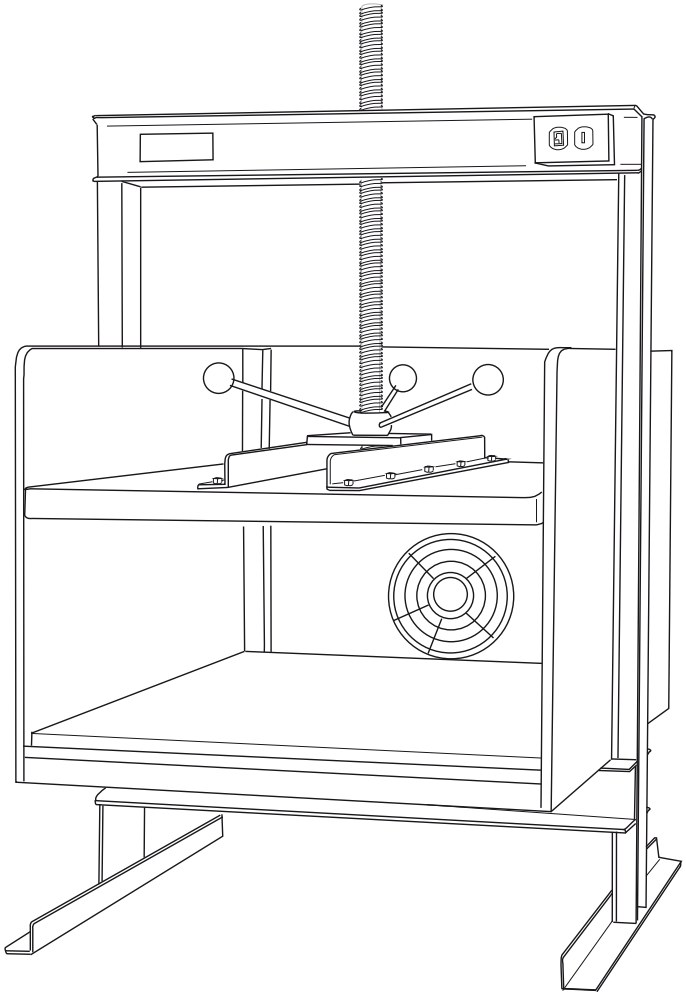

Box Dryer
(David Reina Designs Inc., Brooklyn, NY)

Insert stack (alternating acid-free and buffered corrugated double-wall board, mat board, blotters and damp paper), apply screw pressure and turn on fan. Expect paper to be dry by the next day.

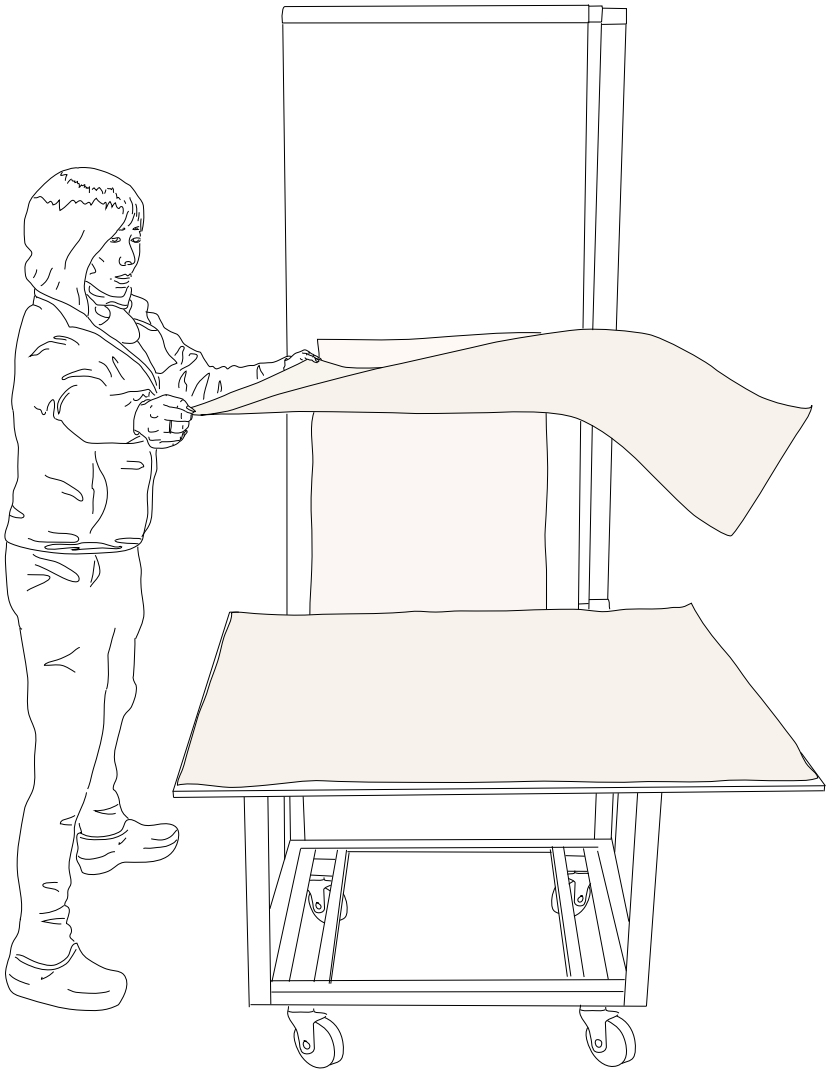

Peeling washi from the drying boards (background) and stacking finished sheets (foreground)

Making up [Packaging] Hanshi

"The paper buyer may buy it, son. Cover your windows with repulped paper!"

"This is good paper. The tax inspector will be very glad to get it."

MAGNOLIA EDITIONS