Hex End Bolt
Stainless Steel

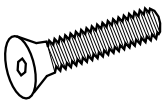

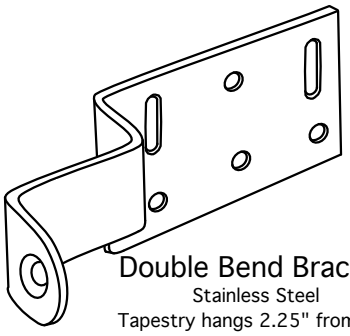

Double Bend Bracket
Stainless Steel
Tapestry hangs 2.25" from wall

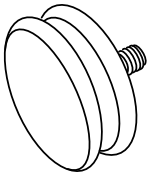

Traditional End Cap
Nickel Plated Steel

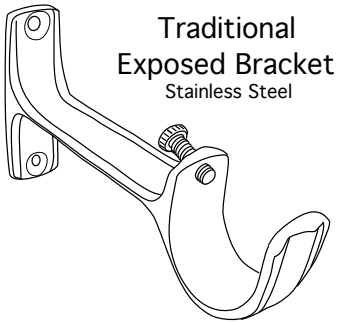

Traditional Exposed Bracket
Stainless Steel

Top Bar Nickel Plated Steel

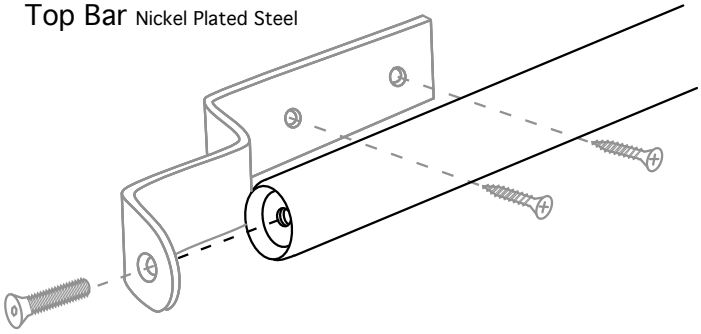

Inner Support Bar (inside top bar)
Galvanized Steel or Aluminium

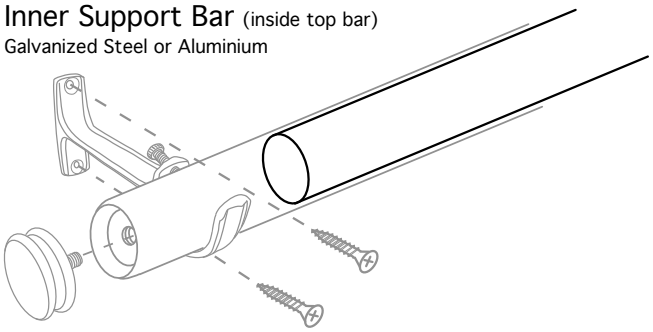

Single Bend Bracket
Stainless Steel
Tapestry hangs 1" from wall

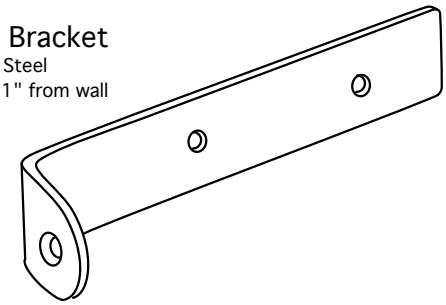

Single Bend Bracket w/Support Plate
Stainless Steel
Tapestry hangs 1" from wall

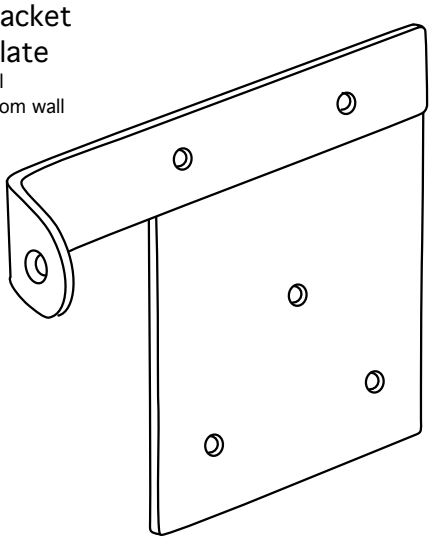

Aviation Cable w/Crimp
304 Stainless Steel

Locking Hook
Chrome

Clip Rings
Painted Steel

Bottom Hem Bar
Galvanized Steel

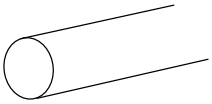

Rubber Tip
for Bottom Hem Bar

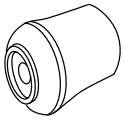

Loop Ring
for Bottom Hem Bar
Rubber and Steel

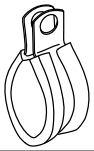

Loop Ring
for Bottom Hem Bar
Plastic

Bottom Hem Weights

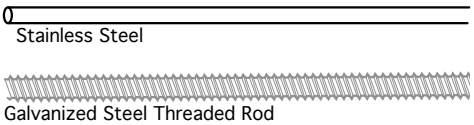

Stainless Steel

Galvanized Steel Threaded Rod

©2006 Magnolia Editions