Stainless Steel Bracket with Weight Rod in Bottom Flange

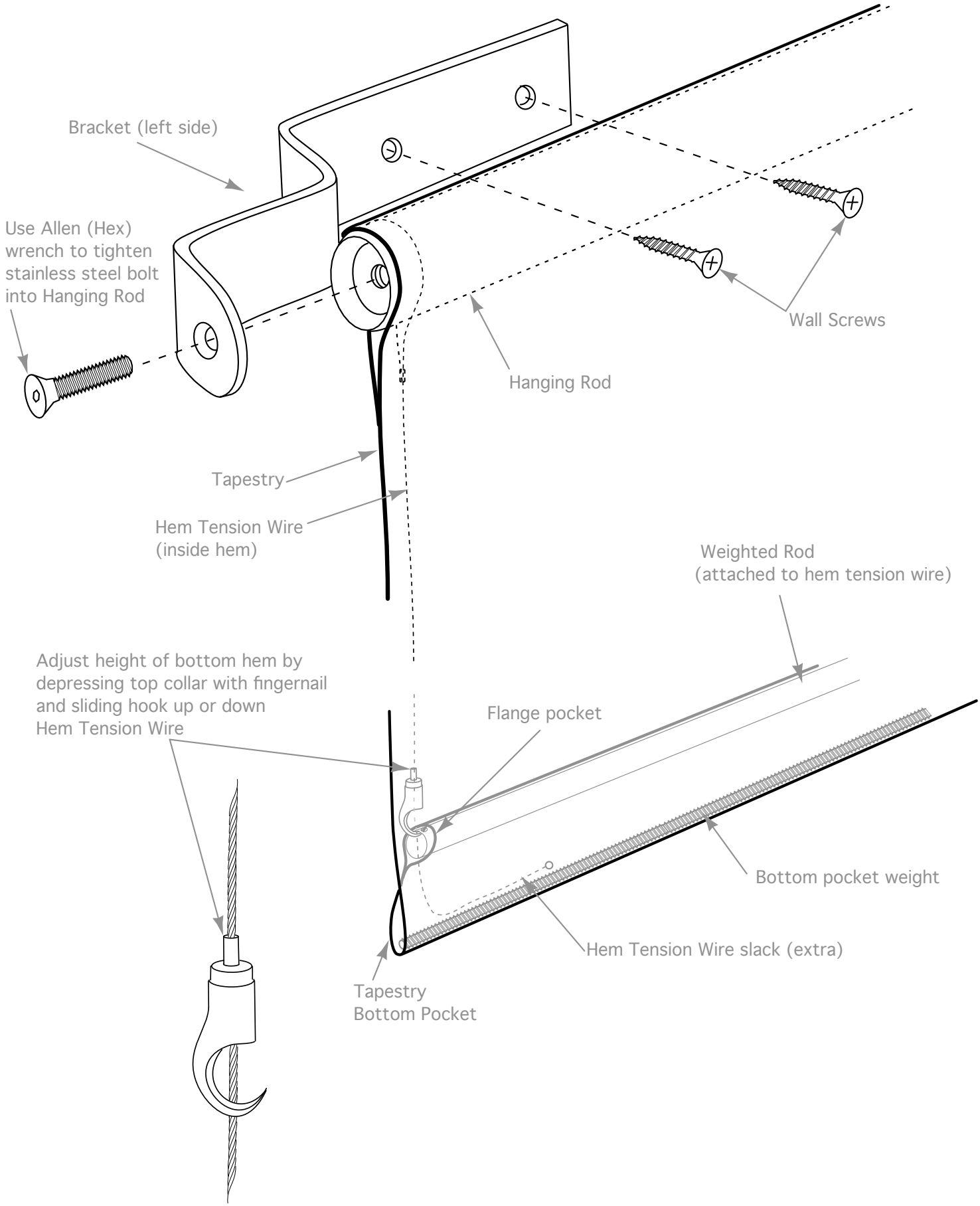

©2006 Magnolia Editions