Stainless Steel Bracket with Drapery Rings

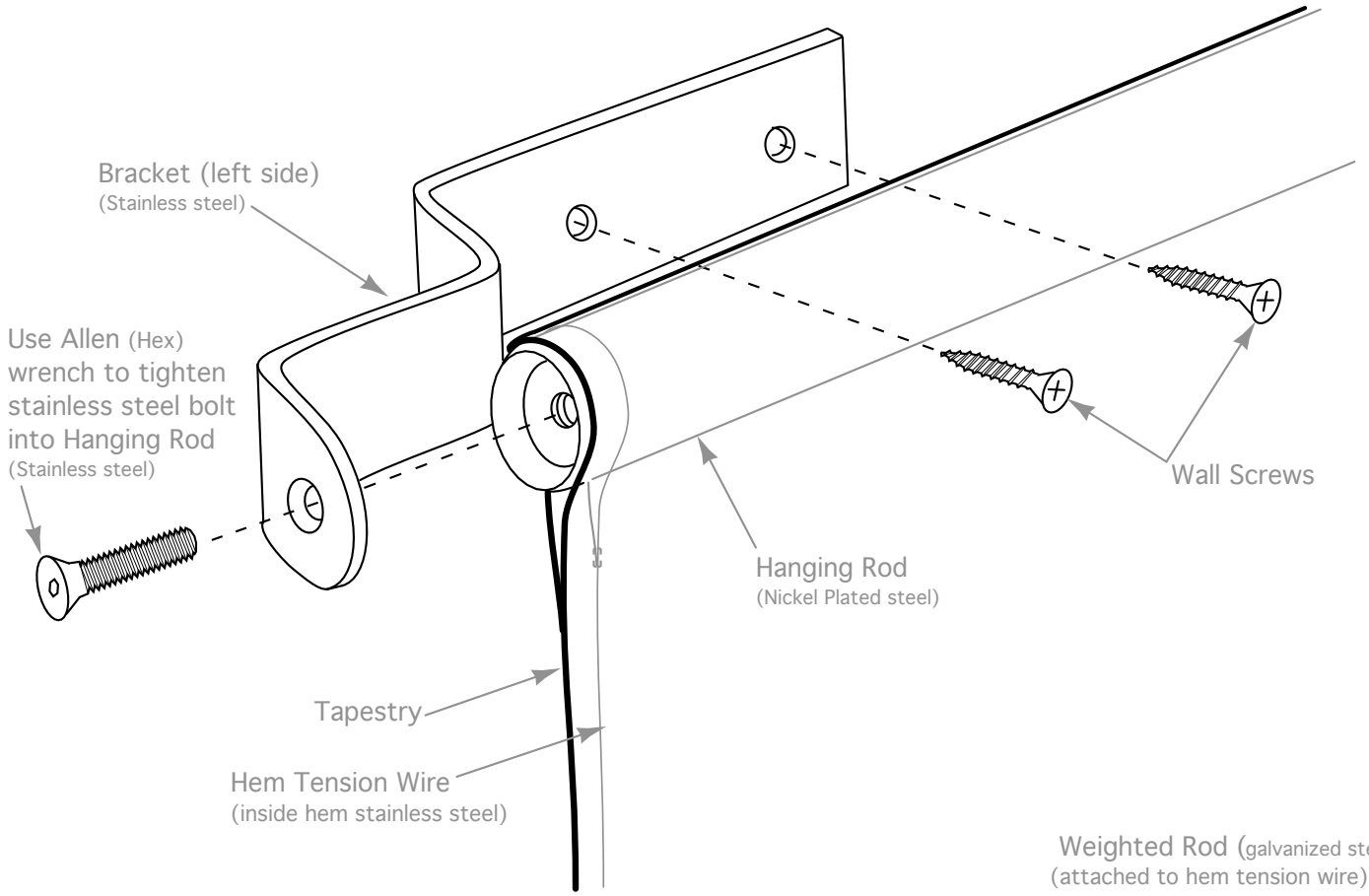

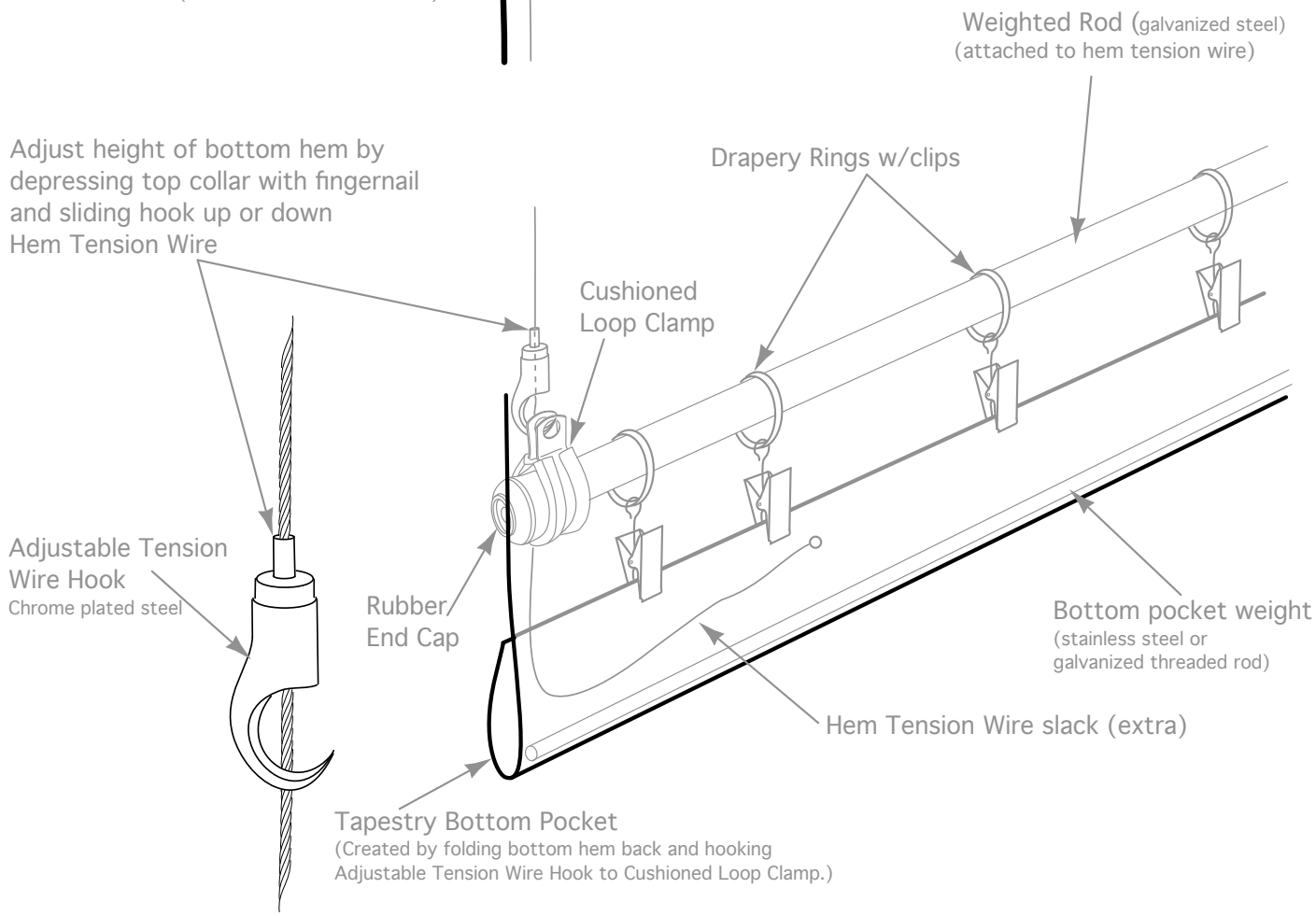

©2006 Magnolia Editions