Stainless Steel Bracket with Bottom Pocket

(tapestry hangs 2.25" from wall)

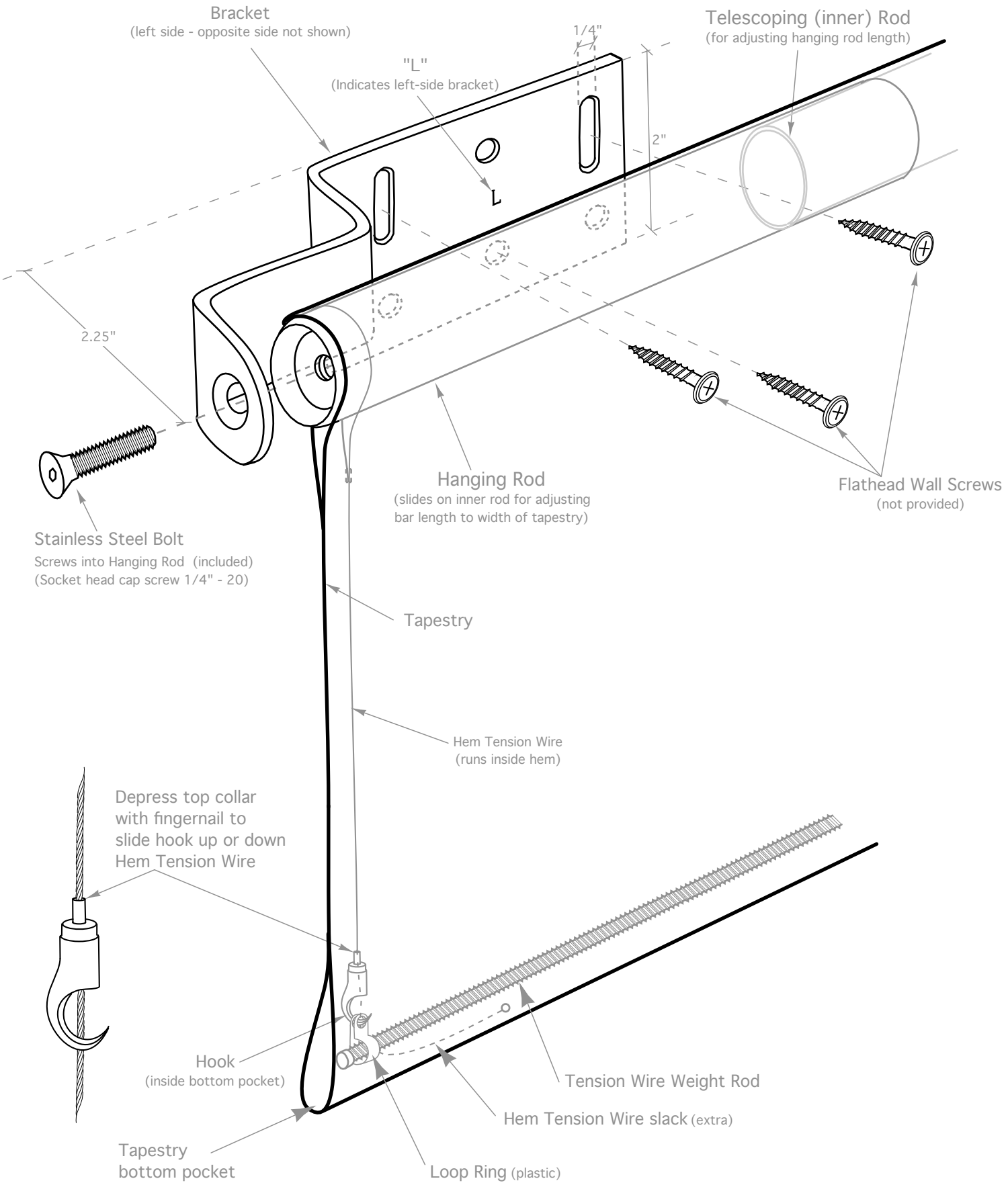

©2007 Magnolia Editions